MODEL A RESTORERS CLUB
FOUNDED 1952

MARC News

Official Publication of Model "A" Restorers Club

Vol. XI, No. 5 | Dearborn, Michigan | September-October, 1964

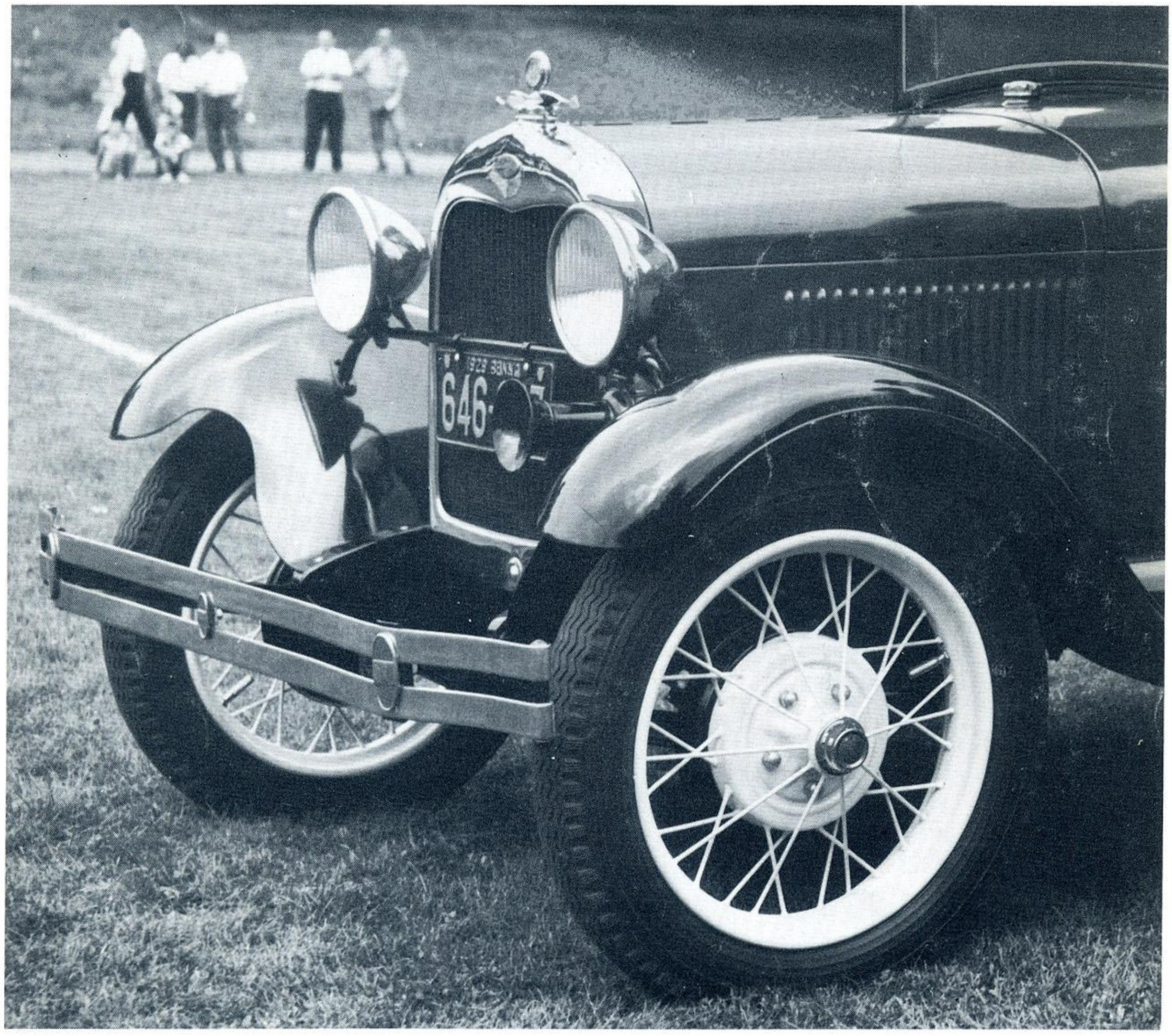

PUBLISHED BIMONTHLY BY THE MODEL "A" RESTORERS CLUB, INC.

MARC News is a bimonthly publication of the Model "A" Restorers Club, Inc., a nonprofit organization dedicated to encourage its members to acquire, restore and exhibit the Ford Model "A," 1928-1931, and all literature pertaining to it.

Membership $5.00 per year *Printed by Aronsson Prtg. Co.*

Business Address: P.O. Box 1930-A
Dearborn, Michigan

STAFF

Publication Director ..... George DeAngelis
Printing Coordinator ..... Lloyd Van Meter
Technical Research ..... Edward Francis
Distribution Chairman ..... Dick Byrom
Fashion Editor ..... Etta Francisco
3827 Winona Ave.
San Diego 5, Calif.
Regional News Editor ..... Ray Matthews
Box 53, R D 4,
Finleyville, Pa.
Classified Advertising ..... Stewart A. Murray
12069 Ashton Ave.,
Detroit 28, Michigan

CLUB OFFICERS

President — Stanley C. Walz
4414 Oak Court
Monona, Wisconsin 53716
Vice-President — Charles Adams
Box 345
East Point, Georgia
Secretary — Frank Kinzinger, Jr.
12108 Longacre
Detroit, Michigan 48227
Treasurer — William C. Friar
8011 Edgewater Road
Riverside, Illinois 60545

COMMITTEES

Activities Chairman — Norbert C. Hodgson
100 Helen Street
Library, Pennsylvania
Technical Chairman — Paul Moller
2024 W. Marquette Road
Chicago, Illinois 60636
Regional Organizer — Edward A. Breedon
2643 E. Streetsboro Road
Hudson, Ohio
New Membership Inquiry — Charles Adams
Box 345
East Point, Georgia

Neither MARC News nor Model "A" Restorers Club can assume responsibility for errors in copy or information, or for claims arising therefrom. MARC News or its staff does not assume any liability or responsibility for products or services listed herein, or resultant transactions.

REGIONAL DIRECTORY

Alabama
Jack Keller
1001 Simmons Circle
Birmingham 14, Alabama

Calumet Region
Joseph Vondrash
4526 Harvey
Western Springs, Illinois

Chesapeake Bay
William E. McCullough
124 Manchester Street
Glen Rock, Penna.

East Point Georgia
Norman F. Turnipseed
392 Old Alabama Rd.
Mabelton, Georgia

East Tennessee
Harry Whitaker
1300 Indian Ridge Road
Johnson City, Tennessee

Falls City
Thomas H. Jones
1702 Dundee Road
Louisville 5, Kentucky

Harbor Area
Dean M. Salazar
2033 W. 231st St.
Torrance, Calif.

Hudson Valley
Richard C. Elwyn
3 Greentree Drive, So.
Hyde Park, N.Y.

Illinois
Don Engelmann
1430 Diversey Pkwy
Chicago 14, Illinois

Indiana-Ohio
Robert H. Tomlinson
RR 2 Box 138
Anderson, Indiana

Michigan
Robert Grandy
21473 Clarita
Detroit 19, Mich.

Mount Vernon
Richard Lebkicker
813 Chowan Ave.
Alexandria, Virginia

Neb. - Iowa
Wendel K. Johnson
424½ Main St.
Plattsmouth, Neb.

New Florida
Brad Leonard
Route 1, Box 334
Ocala, Florida

Niagara Falls
Noland E. Smith
62 Whiting Street
North Tonawanda, New York

Nickle A Region
H. S. Kalinka, DVM
Route 4
Chilton, Wisc. 53014

North Carolina
Chick Sale
Route 3, Box 410
Asheville, N.C.

Rebel Region
E. Earl Shade
R.F.D. #1
Winchester, Virginia

San Diego Region
Walter A. Anderson
2124 Frankfort St.
San Diego, Calif. 92110

San Gabriel Valley
Bill McMullen
3285 Frazier Street
Baldwin Park, California

Smoky Mt.
Lamar R. DeShane
2915 E. Fifth Ave. N.E.
Knoxville, Tenn. 37914

Southern Indiana Region
Frank H. Fisher
3233 Woodland Pkwy.
Columbus, Indiana

Southwest (Ariz.)
Bert Haynes
2949 E. Cholla St.
Phoenix, Ariz. 85028

3 River Region
Robert Fawcett
1115 Long Run Road
McKeesport, Pa.

Torontario
William LeNoury
717 Brimley Rd.
Scarborough, Ontario, Canada

Western Massachusetts
Roger E. Beaudoin
60 Easthampton Rd.
Holyoke, Mass.

Wisconsin
Everett Good
907 Second St.
Baraboo, Wisc.

MODEL A RESTORERS CLUB
FOUNDED 1952

MARC NEWS

© Copyright 1964 MARC News. Reproduction of contents prohibited without written permission.

Vol. XI, No. 5 September-October, 1964

CONTENTS

LETTERS TO THE EDITOR ..... Page 3

AUTHENTIC OR NOT AUTHENTIC ..... Page 4

HOW "A" TECHNICAL ARTICLES WERE WRITTEN ..... Page 5

1928-29 TUDOR SEDAN ..... Page 6

COAST TO COAST WITH ABLE ..... Page 8

CLUTCH CHATTER (Technical Hints) ..... Page 10

SHOWCASE ..... Page 12

ETTA'S CETERA (Fashions) ..... Page 14

MARC TEN YEARS AGO ..... Page 15

REGIONAL NEWS ..... Page 18

PARTS LIST ..... Page 21

"A" FLEA MARKET (Classified Ads) ..... Page 23

LETTERS TO THE EDITOR

QUESTIONS

Dear Editor:

I am in the process of restoring a 1930 Model "A" cabriolet and was wondering if you could help me out on some information such as body colors, interior trim schemes, striping, and any other information that would be of any help to me.

According to the motor number the car was made in November, 1929, and has a Briggs body.

George Nilles
Bagdad, Kentucky, 40003

Dear Editor:

I recently purchased a 1930 cabriolet Briggs body (68B). As I am a comparatively new member of M.A.R.C., I wondered if you had ever run a series on this model in your Authentically Speaking section. If so, I would like to know what issue it was.

Would appreciate hearing from persons having this model, or information on same.

You have a wonderful magazine. We enjoy it very much. Keep up the good work.

John C. Thompson
P.O. Box 428
Palm Bay, Florida

Sorry, we have not printed an Authentically Speaking article on the cabriolet. We hope to have one in the future.

The body colors were: Andalusite blue upper and lower with French gray stripe; Mole skin brown lt. upper and lower with tacoma cream stripe, Bronson yellow lower body and seal brown upper body and belt molding with an orange stripe, Elkpoint green body and hewaney green upper body and belt molding wtih apple green stripe.

Dear Editor:

As a wife of a M A R C member I wrote to Ford Motor Company to obtain a picture of the Model "A" 1931 roadster that appeared on the cover of the March-April issue of the M.A.R.C. News. I was advised that the price is now $1.50. Shall enclose portion of the Ford Motor Company letter. Thought you might like to pass this information on to your readers.

Mrs. Albert Cashman
23050 Eastwood
Oak Park 37, Michigan

Increased production costs made necessary a corresponding increase in the price of prints to $1.50. To order reprints, please give the file number and enclose check or money order payable to Ford Motor Company in the amount of $1.50 for each 8 x 10 glossy print requested.

(Continued on Page 16)

AUTHENTIC OR NOT AUTHENTIC

Your editor received the following thought-provoking letter from Chick Sales, Director of North Carolina Region, and one of our club's most active members.

Dear Editor:

I must disagree with your reply to Rodney Gott in the May-June Issue concerning the area under the rear fenders. There is no way, absolutely no way on earth, for this area to be any other way except body color and still be original and authentic. It does not matter if Henry Ford himself stood on the assembly line. with black paint and performed this operation with his own two hands, it is NOT *called for in the specifications, and whether the dealer or the assembly line liked it or not, it is authentic and original* only *when painted body color.*

This type of disagreement is most characteristic of conversations and letters every day between members of our club. I would like to reiterate my urging to the National Officers to establish a judging committee, and determine all of these fine points, once and for all, and give them to the regions so they may use the same standards on the local level that is used on the national level.

It is active thinking communications such as this that serves to implement our club's growth and improvement, and we know that Chick's letter will bring additional response.

Even though the subject relates to judging rules, and will have to be resolved by the judging committee, your "MARC News" staff respectfully offers the following opinion.

The growing body of information arising out of the research now being conducted by many, particularly Ed Francis and George DeAngelis, serves not only to increase our understanding of our beloved "A's" but makes us more conscious of the fact that we can speak with less positive authority in areas that in the past we felt were positively defined.

For those who are unfamiliar with the automotive industry as it was then and is now, you should understand that there are 5 basic controlling factors:

1. The original specification or design.
2. The ability of the manufacturing locations to produce the material as specified.
3. The continuing change that takes place because of field experience.
4. The ability of supply vendors to make the parts.
5. Last, but of particular importance, the preferences of the buyers which will differ from area to area.

Briefly, no two manufacturing locations, even if producing similar parts, are equipped with similar machines. Processes and specifications must, therefore, be changed to fit the manufacturing capabilities. Tooling is a key point. One plant may be producing a part with a certain type tooling, while another plant is unable to do so. These differences in manufacturing capabilities and tool design will result in modification from plant to plant. Vendor sourcing (outside purchased parts) is even more difficult. Changes or modifications must be allowed for, resulting in continuing specification deviations. Throughout the course of any one model year, these deviations will total in the thousands.

Not to be overlooked was the original purchaser of the vehicle. Many of the Model "A" buyers were individualists with definite ideas of what they wanted, and those ideas did (as they do now) differ from area to area. Specific authorization and often prepayment was made to dealers to make changes to fit the fancy of the purchasers in an individual area.

We do not mean to establish as fact what may have been only general practice; but, in our opinion, we do need a framework for our judging standards, which recognizes and accepts as did the Company in preparing the original specifications, sufficient give and take.

The Model "A" is, as told by a sailor friend, like other women, "They're all the same, but there is a difference."

"A" POEM"

It sputtered and coughed,
then slowed to a stop.
And people gathered around,
even one big cop.
Then out jumped a man
with a look of dismay.
"Oh, dear," cried he "What's
happened to my 'A'?"
He threw open one side of the
vented hood,
Examining the generator
as best he could.
Then with a bang and a look of
indignant pride,
He sneered at the crowd and
opened the other side.
There he investigated the
carburetor with great care.
But, indeed, found his trouble
was not there.
Despite the crowd's giggles and
with faith in his Ford,
He checked every detail to find
all in accord.
For his "A" a tinge of distrust
he began to feel,
As he slowly climbed behind
the steering wheel.
Suddenly something caught his
eye, and ALAS,
He had only forgotten to
turn on the gas!

FRED FINK

DeANGELIS AND FAHNESTOCK

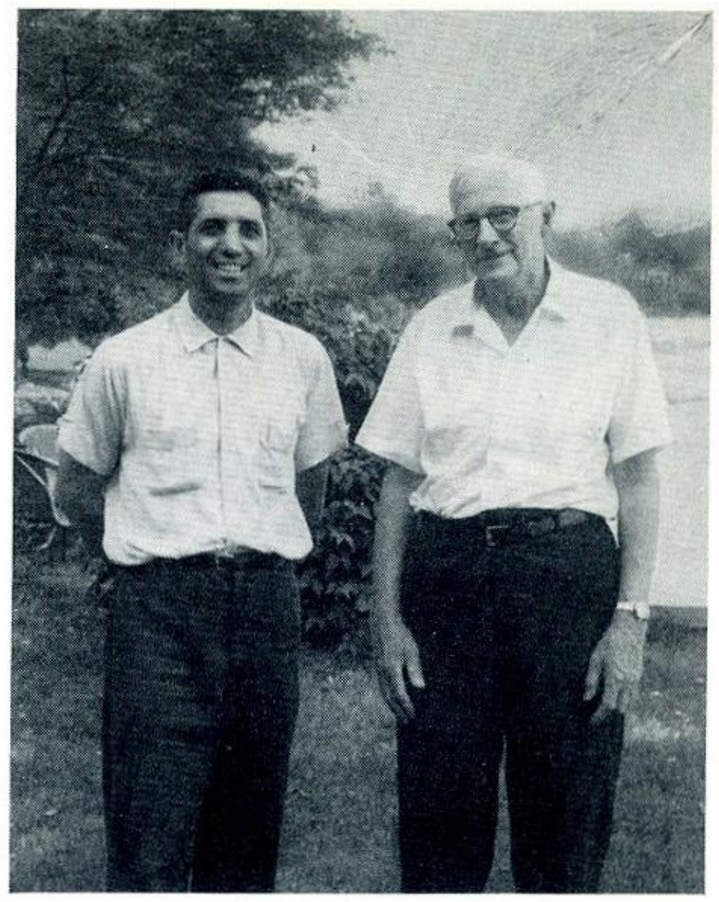

George DeAngelis recently visited Mr. Fahnestock at his summer cottage near Dunkirk, New York. The main topic, of course, was the Model "A." In commenting about the long life of the car, he stated: "There are still about 300,000 of the 35-year-old Model "A" Fords in the United States, and of these, perhaps 280,000, or more than a quarter million, are still in use.

"With over a third of a century past, it is interesting to surmise how many of these will reach the century mark in the year 2028.

"There is the story of 'The Deacon's One-Hoss Shay' which was fashioned in such a perfect way that it lived for 100 years to a day. So why not the Model "A."

"Thirty-five years ago, these Model "A" Fords wore coats of many colors, and since the steel surfaces of the Model 'A' Ford were bonderized to prevent rust, many of these Model 'A' Fords have been repainted to equal their pristine beauty, while the radiator shells and other parts of stainless steel still retain their enduring beauty.

"Certainly maintenance has been needed to keep these Model 'A' Fords in running order; new tires to replace those worn from endless miles, new batteries and plugs to replace those that have lost the spark of youth.

"But the essential reason why so many Model 'A' Fords are still in use lies in the fact that it was designed to maintain a road speed of over 50 miles an hour, and this is still the legal road speed in many of our most populous states in America."

* * *

TECHNICAL TIPS

With gasoline tank gage reading "full," there is still room for 1⅛ gallon. But fill slowly, as the strainer holes are covered. At "zero," there is still ½ gallon.

Murray Fahnestock.

How Model "A" Technical Articles Were Written

An Apology by Murray Fahnestock, Mem. S.A.E.

Until your editor carelessly remarked, "How about a brief item on how the articles on the Model "A" Ford were written?" — I had not thought of this, but I had just drifted into it.

Of course, there is creative writing . . . as an art. That implies something original — a product of the imagination and, preferably, interesting and beautiful. But a writer's first novel is often based on elaborated reminiscences of his own life. But I'm not in that class.

There are also reporters to keep us informed as to history, which is news when it first occurs. This not only covers events, but also ideas, and can be a useful service. It has been a pleasure to report events and new ideas in the Ford industry. When two people trade dollars, each has the same number of dollars, but when they trade ideas, then each has twice as many.

The first need of a reporter is source material, as he cannot give out what he doesn't take in. Newspaper reporters usually take notes from the spoken word, but technical reporters know that the spoken word is often unreliable. So they prefer to gather information from as wide a range of reading as possible.

Kipling wrote, "They little know of England, who only England know." So may we add our two-bits as: "They little appreciate Ford cars, who only Ford cars know."

A real writer might start with an outline, like the *Vision of Sir Launfaul:* "Over his keys the musing organist, beginning doubtfully and far away, lets his fingers wander as they list to build a bridge from dreamland for his lay."

That's not how this reporter builds his space-fillers, a thing of shreds and patches, from his notes. But, taking a sourball or caramel into the wide-open space below his nose (since good wives object to chawing tobacco), sighs and, picking up one of his notes, writes as best he can about that, laboriously putting one word after another. Hard work! That's what he tells the income tax man.

Since I make so many errors on full-size pages, I use half-size pages and try to keep each idea on a separate page.

When Editor George DeAngelis saw my suggestion for writing on half pages, he said to reduce his errors he might try quarter pages. Since that is a better idea, this suggests that one-eighth pages would be better still; and so along the road of one-half of one-half to one-half of nothing. Perhaps I should not take the cover off my typewriter!

When there are too many pages, I shuffle these around on the desk, like solving a picture puzzle, and try to arrange them into some semblance of order. If there are too many pages for the desk, they may cover half the floor of my den with me on hands and knees (like Belshazzar when he did eat the grass of the fields or the basketball player who has dropped his contact lens or his teeth).

After making corrections, the article is rewritten, often several times. This habit of rewriting is why reporters are seldom good speakers, because they keep mentally rewriting their talk while delivering it, resulting in confusion.

With me, it first started when my busy father, in trying to keep an 8-year-old out of mischief, offered me $2 to read the Bible through and, although I found the "be-gats" tough going, I got the $2. Then I went to the public library and asked for Gibbon's "Decline and Fall of the Roman Empire." The librarian asked if I wanted all of it. When I said "Yes," she winked at the others and brought out a stack two feet high. So they laughed at me as I staggered away, with only two of the six volumes under my arms.

In my first year at prep school, I thought bigger words were more impressive and wrote an essay on Hannibal. In class, the teacher said to my dismay, "Read it." I tried to tell him it wasn't finished. He insisted. I tried to eliminate the big words I couldn't pronounce and stumbled as the Roman Empire fell down on me in confusion. Et tu, Brute!

After his little joke, the teacher said to rewrite it in simpler words. Then he had it published in the school bulletin, thus giving me a taste for "printer's ink" which has never left me.

This proved that, although I couldn't write well the first time, almost anything could be improved by rewriting it one or more times.

Flaubert made DeMaupassant write a story a day, since practice gives proficiency. I have tried to follow the same idea, although not with the same success.

When I couldn't find suitable illustrations for a story, these were made by my wife and signed "H.M.F." But "My Life Witch Hazel" is another story.

Most frequently I used my own name for the articles, but when my articles became too many in the same magazine, I started a series of "nom de plumes." These are scattered throughout the many issues. The most used were: *Thomas Howe, Ed Technical, B. Wise, Jackson Smith, Jack Williams, Robert Robray, Phillip Lawrence* and *Johnny Jump-Up.*

The book "Know the Ford" was an accident.

First printed as a collection of magazine articles from January to December, 1928, and called "The Model 'A' Ford Car," it was soon sold out. It was republished in French by the Ford Motor Company of Canada. A second edition called "Know the Ford" was published in 1930's and sold well, until the Ford V-8 turned the Ford dealers interest to V-8 engines.

Then "Know the Ford" became a sleeping beauty (if I may say so?) for nearly 30 years. Finally, "Prince Charming" (Post Publications) arrived and, to my complete surprise, produced a better book by adding questions and answers from another book of mine. And the book now lives happily after its resurrection.

When an erstwhile friend said, "So you're a writer and use your brains! It's a wonder you don't starve." I realized I would have to use the Ford idea of the mass production of words to keep the wolf from the door. So I briefly returned to high school to learn the touch system of typing more rapidly.

By averaging 10 to 20 pages per month of more than 800 words per page for 40 years, that adds to more than 5 million printed words. The quantity, if not the quality, was there.

A typical, 300-page novel of 240 words per page would use 72,000 words. So dividing over 5 million words by 72,000 words would be the equivalent of 70 novels. I wore out a lot of typewriter ribbons, even though winning no blue ribbons by so doing.

* *

Fahnestocks at their summer cottage near Dunkirk, N. Y.

Authentically Speaking

or

As Mr. Ford Built the "A"

by Edward Francis

and George DeAngelis

Editor's note: One of a series of articles describing the body colors, interior trim schemes and chassis changes that were incorporated in the Model "A" at the time of its production. It is published by the MARC News in an effort to broaden its readers knowledge and with the intent to encourage interest in preserving and restoring the Model "A" as it was manufactured.

All material has been obtained from the Ford Motor Company archives, Ford's Research and Engineering Staff library, or the Engineering Release records for the Model "A".

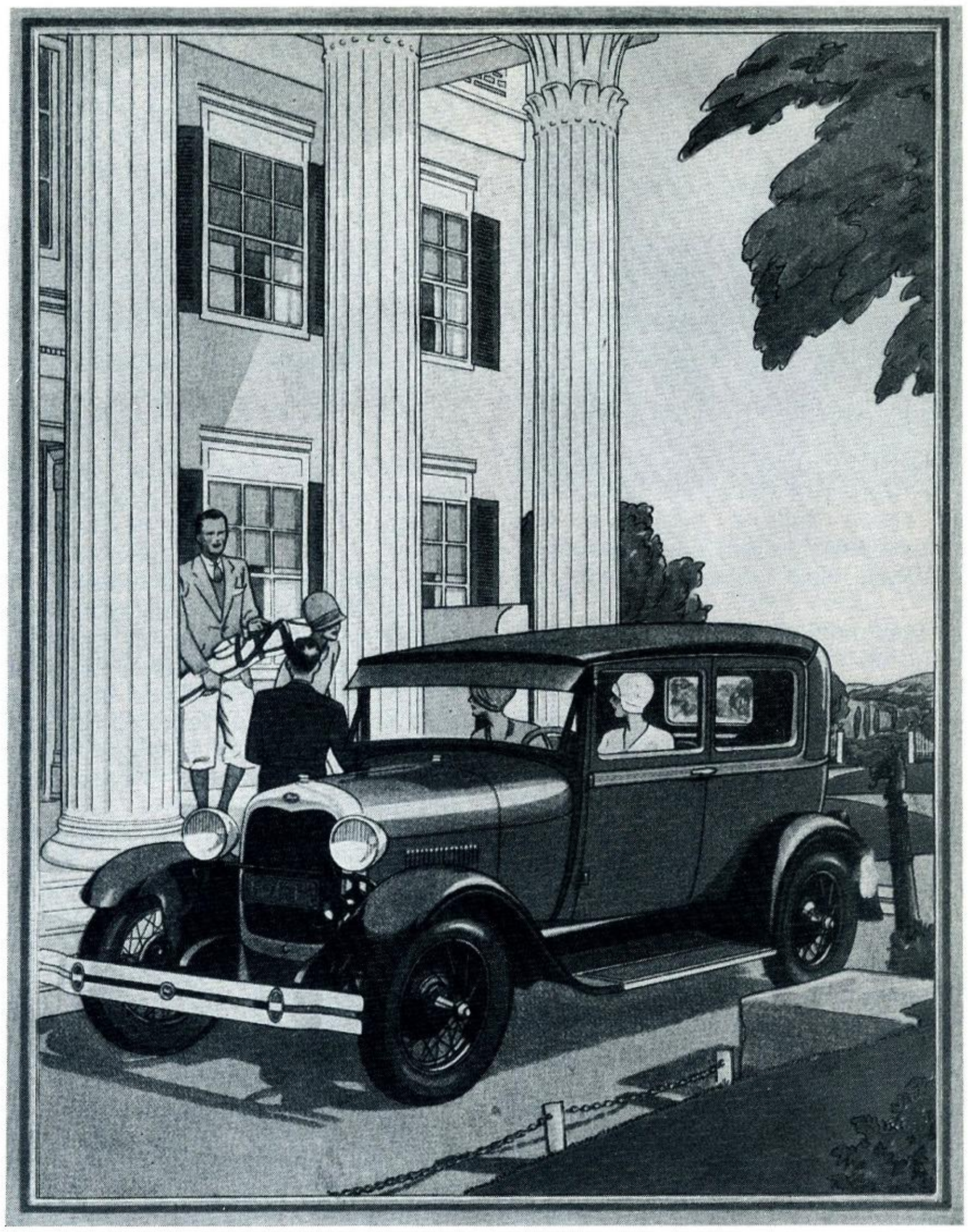

1928-29 TUDOR SEDAN

The Tudor was one of the original six body styles introduced to the public with the introduction of the Model "A." In the following two years, almost three quarters of a million were built, making this style the best seller of any Model "A" body style.

The exterior of the Tudor Sedan has the characteristic of the coupe pillar with a broad belt molding which starts at the front door hinge and stretches back to the rear of the back window where it divides. A small molding skirts the window line to the roof and a wider one continues around the rear. Two ⅛-inch stripes of a contrasting color add smartness to the molding. The lower stripe is approximately ½ inch above the lower edge of the belt molding and continues around the back of the car to the opposite side. The upper stripe follows the upper edge of the belt molding to the rear window, then up the molding to the roof where it comes to a point and reverses itself to come down and around the back of the body.

Contrary to the belief of many, there were no two-tone color combinations for the 1928-29 Tudor Sedan. That is, the body was painted all one color, upper and lower, the only exception being belt molding, reveals and upper body back on some models. (see chart)

In 1928, there was a choice of five color combinations with three of them being blue, a most outstanding feature for a low-priced car. The colors were Niagara blue light, Niagara blue dark, gunmetal blue, dawn gray and Arabian sand dark.

With the introduction of the 1929 Model "A," a new set of color combinations was offered: bonnie gray, vagabond green, rose beige and andalusite blue. For restoration purposes, welting on the cowl should be primed and then painted body color.

The interior, with unusually smart lines and attractive trim scheme, provided ample seating capacity for five persons. Newly designed, identical passenger and driver seats featured well-formed spring backs, which folded down to permit easy access to the rear compartment. Interior trim schemes consisted of gray cloth with wool stripe, gray cloth with silk stripe and blue cloth with hairline stripe. The pattern-type material was used to trim the seats, door and quarter, while matching plain material was used for back panels, roof rail, windshield header and lock pillar. The top was trimmed with cotton-napped headlining material to match. The front and rear floors were covered with brown carpet until late 1928, at which time it was replaced with black rubber.

In January, 1929, two more trim schemes were added, making a total of five. One of the new trim schemes consisted of a blue hairline-striped cloth on parts of the seats, and plain blue wool cloth on the doors and quarter panels. The second scheme had a brown check on the seats with plain wool cloth on doors and trim panels. In addition, the blue trim scheme was available as a piped or plain design, while the brown check was only available as a piped design.

During Model "A" start-up—1927—there were 1948 Tudor Sedans made for domestic consumption. In 1928, the domestic production reached 208,562 cars, and in 1929 the Model "A" Tudor had its biggest year with 518,588 cars manufactured.

PARTS INTERCHANGEABILITY

To know which parts are interchangeable between the various body styles is always helpful. Following is a list of Tudor parts which were also used on other body styles:

Body front assembly (cowl) and windshield—All Coupes 1928 and 1929, Deluxe Delivery 1928 to 1930, Taxi Cab 1928 and 1929, Station Wagon 1929.

Door assembly—All Coupes 1928 and 1929, Deluxe Delivery 1928 to 1930, Taxi Cab 1928 and 1929.

Window regulator assembly—All Coupes 1928 to 1931, Closed Cab Trucks and "AA" Panel Delivery 1928 to 1931, Deluxe Delivery 1928 to 1930, Taxi Cab 1928 and 1929.

Window regulator handle (nickle-plated)—All Coupes 1928 to 1931, Town Car 1928 and 1929, Closed Cab Trucks and Panel Delivery 1928 to 1931, Taxi Cab 1928 and 1929, Standard Fordor (2 and 3 window) 1929.

Door handle assembly, outside—All Coupes 1928 and 1929, Taxi Cab 1928 and 1929, Deluxe Delivery 1928 to 1930.

Door handle, inside (nickle-plated)—All Coupes 1928 to 1931, Closed Cab Trucks 1930 and 1931, Deluxe Delivery 1928 to 1930, Taxi Cab, 1928 and 1929.

Cowl cardboard assembly—All Coupes 1928 and 1929.

Pillar finish stripe—All Coupes 1928 and 1929, Deluxe Delivery 1928 to 1930, Taxi Cab 1928 and 1929.

Brown back window curtain—All Coupes 1928 to 1931, Standard Fordor 1929 to 1931, Deluxe Fordor 1930 and 1931, Victoria 1930 and 1931.

During the early production of the Model "A" there were many changes, especially on the chassis. These changes were covered in the Authentically Speaking, 1928-29 Roadster article (July-August 1963). Following are some of those major changes.

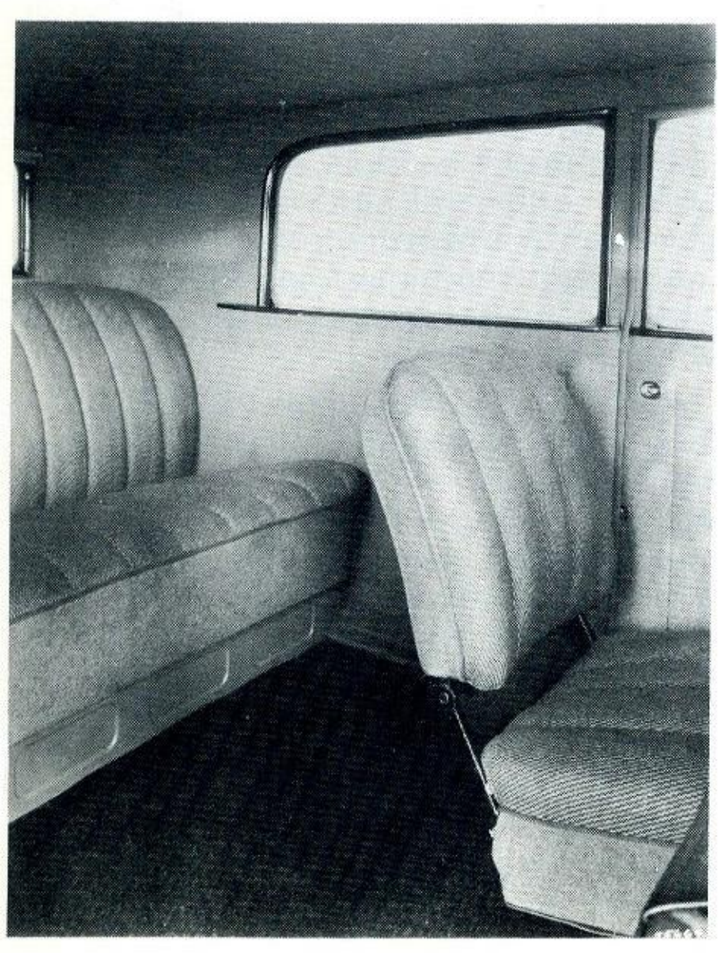

JANUARY 1928

Change from integrated parking brake to an independent parking brake system. This change made the rear wheel, brake drum, backing plate, hub wheel lugs and hub cap obsolete.

JUNE 1928

The brake rods were redesigned into solid nonadustable rods. This was done to give a fixed rod length and simplify brake adjustment. This change necessitated changing the front brake lever and the upper end of the outer lever of the cross shaft assembly from a single eye end to a clevis.

NOVEMBER 1928

New flexible front engine mount was introduced to prevent engine vibration from being transmitted to the frame. Recommendations were made to all dealers to rework existing cars to the new mount.

New single plate clutch and flywheel was made standard on all cars replacing the multiple disc plate clutch and flywheel.

A new service brake cross shaft assembly was designed and made standard on all cars. The new shaft replaced the old style cross shaft and equalizer assembly.

With the new brake cross shaft adustable brake rods were introduced.

The red plastic steering wheel was replaced with a black hard rubber steering wheel.

FEBRUARY 1929

New design steering gear was being provided in large quantities. This new gear was known as the hour glass worm and two tooth sector type.

Two lite headlamps were introduced in two types — a two bulb type for cars without cowl lamps and a single bulb type for cars with cowl lamps.

OCTOBER 1929

Cylinder head and gasket were redesigned adding an elongated hole in them to increase water flow through cylinder head.

Rear axle shaft housing was changed, the change could be incorporated in present cars by using a thinner gasket.

EXTERIOR COLORS - 1928

Body Upper & Lower	Body Upper Back	Belt & Molding	Reveals	Stripe
Niagara Blue Lt.	Niagara Blue Dk.	Duchess Blue	Duchess Blue	French Gray
Arabian Sand Dk.	Copra Drab	Copra Drab	French Gray	French Gray
Dawn Gray	Gunmetal Blue	Dawn Gray	Dawn Gray	Straw
Niagara Blue Dk.	Niagara Blue Lt.	Niagara Blue Lt.	Duchess Blue	French Gray
Gunmetal Blue	Black	Black	French Gray	French Gray

EXTERIOR COLORS - 1929

Body Upper & Lower	Belt & Molding	Reveals	Stripe
Bonnie Gray	Chelsea Blue	Bonnie Gray	Straw
Vagabond Green	Rock Moss Green	Rock Moss Green	Straw
Rose Beige	Seal Brown	Seal Brown	Orange
Andalusite Blue	Black	Niagara Blue Lt.	French Gray

Chassis, Fenders and Wheels were Black. Bumpers were Chrome Plated - All Other Bright Metals were Nickel Plated

INTERIOR TRIM SCHEMES

Interior Trim Scheme	Door and Quarter	Head-lining	Wind-lace	Sides Face, and Back of Seats	Seat Cushion and Back	Cowl and Seat Bottom Cardboard	Back, Roof Rail, L'k Pillar W/S Headliner	Curtain	Cord	Mouldings
Gray Cloth Wool Stripe	Gray Cloth Wool Stripe	Gray Nap'd Headlining Cloth	Gray Worsted Cloth	Gray Cloth Wool Stripe	Gray Cloth Wool Stripe	Colonial Grain Gray	Plain Gray Wool Cloth	Blue Silk	Blue Braided	Gray
Gray Cloth Silk Stripe	Gray Cloth Silk Stripe	Gray Nap'd Headlining Cloth	Gray Worsted Cloth	Gray Cloth Silk Stripe	Gray Cloth Silk Stripe	Colonial Grain Gray	Plain Gray Wool Cloth	Blue Silk	Blue Braided	Gray
Blue Cloth Hairline Stripe	Blue Cloth Hairline Stripe	Blue Nap'd Headlining Cloth	Blue Worsted Cloth	Blue Cloth Hairline Stripe	Blue Cloth Hairline Stripe	Colonial Grain Gray	Blue Nap'd Headlining Cloth	Blue Silk	Blue Braided	Gray
Blue Cloth* Hairline Stripe	Plain Blue Wool Cloth	Blue Nap'd Headliner Cloth	Blue Worsted Cloth	Plain Blue Wool Cloth	Blue Cloth Hairline Stripe	Dash Grain Two Tone Gray	Plain Blue Wool Cloth	Blue Silk	Blue Braided	Gray
Brown# Checked	Plain Brown Wool Cloth	Brown Nap'd Healining Cloth	Brown Worsted Cloth	Plain Brown Wool Cloth	Brown Checked	Dash Grain Two Tone Brown	Plain Brown Wool Cloth	Brown Silk	Brown Silk	Buff

* 1929 only — with piped or plain seat design
\# 1929 only — with piped seat design
All hardware (door, window handle, etc.) was nickle plated.

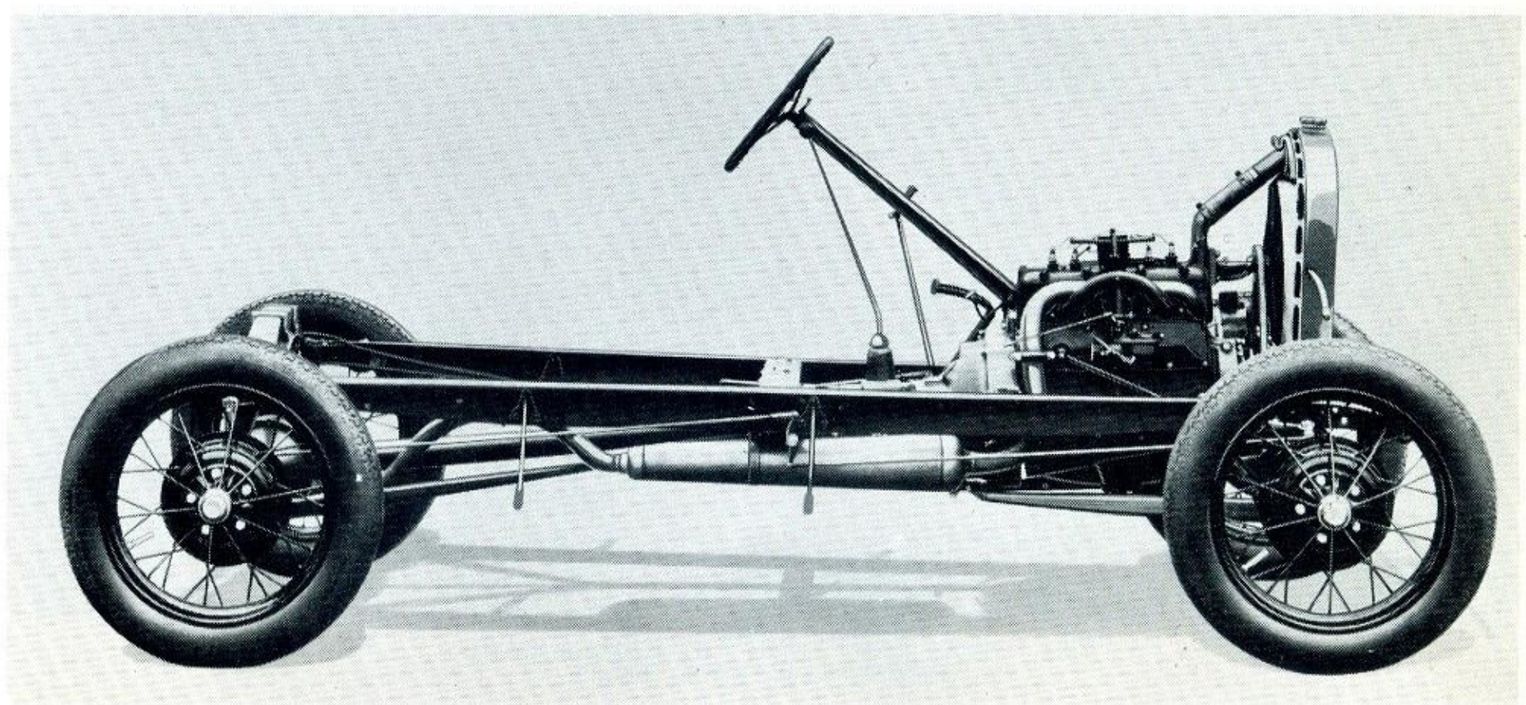

Coast to Coast with Able

by Ruth Newhall
BERKELEY, CALIFORNIA

It was late one night and Ed was getting ready for bed when the telephone rang. He picked up the phone and after the usual "hello" continued:
"Long distance from California?"
"Yes, this is Ed Breedon."
"Yes, I am president of the Model 'A' Restorers Club."
"You say your wife's station wagon broke down somewhere in Virginia?"
"She's driving an unrestored Model 'A' wagon to California? Oh No!"

The voice from the other end belonged to my husband Scott who was calling from San Francisco. I had just informed him of my trouble.

It had all started a few days before, on April 20. My husband and I had just left the annual convention of the American Society of Newspaper Editors in Washington, D. C., and had made our way north to Roscoe, a small town in New York.

We had come to this town in the Catskills because though Scott, my husband, collects his salary as executive editor of the San Francisco *Chronicle*, he disposes of it collecting and restoring cars — mostly classics. Our collection had been augmented by telephone to include an unseen Model "A" wagon.

The ad said "running condition," and Scott figured that it might as well run to California. Since he had to return home to San Francisco quickly on newspaper business, we figured that I could have a wonderful time driving the Model "A" across the continent. I wanted company for the trip, and when I told my plans to Alice Bragg, wife of a fellow car collector, she said, "I'll join you in Philadelphia. Wire me when and where."

When we left San Francisco, I was completely equipped with an assortment of tools, crammed into a leather purse, which I tried to carry nonchalantly on my arm (it weighed 30 pounds). In addition, we had mail-ordered to Binghamton, New York, the nearest city, a set of tires, a distributor and some brake parts.

Before arriving in Roscoe, we also picked up a battery, oil, gasoline, a roll of wire and two used spare wheels and tires.

The dusty vehicle that we rolled out of the shed did not look like a transcontinental speedster. It had been bought new by a local farm-resort owner to take on his honeymoon (they were now grandparents), had served them as a bus for summer guests, and finally as a farm wagon. The wood was painted coffee brown, the cowl blue, the hood cream. The fenders were a little crumpled and torn. All three seats, however, were in place. The wood was a little rotten around the upper corners, and there were no side curtains.

Less than half an hour after we unlocked the door, the engine was running, and we were ready to drive to Binghamton, seventy miles away. We had exactly two blowouts en route, and arrived in Binghamton Sunday night.

Scott had to leave for San Francisco the next day, but before he left he turned the Model "A" and me over to the helpful hands of Ed Stolarcyk, a service station owner. He also gave me a list of *things to do*: find radiator cap, install motometer, weld tie rod, tighten motor mounts, get bill of sale signed, paste permit on windshield, repair wood rot with fiberglass, pick up and mount new tires, have brakes relined, repair radiator, install king pins, condenser, coil, plugs.

Also, things to buy: gas pedal, flash light and flares, breather bypass, floor mat, seat pads, penetrating oil, windshield wiper, jack handle, whisk broom, maps.

I had a 24-hour deadline for departure, since I was to meet Alice the following evening in Philadelphia, 160 miles away. Ed Stolarcyk turned out to be not only well connected in our familiar classic-car circle, but also spared no pains to accomplish miracles in lines of procurement, mechanics and speed. Far into the night, the men at the service station worked while I ran errands.

As a born Californian, I was totally unprepared for the eastern climate. Naturally, the next day it was snowing. I made a last sortie for wool clothes from head to foot, and just after noon left on the slushy streets of Binghamton.

Instead of license plates (the car would not pass inspection), I had a one-trip permit issued in California, which I pasted to the windshield. One hour out, I was stopped by a highway patrolman for lack of plates. I was halted twice more that day, and later in Maryland, Washington, D. C., Georgia, Louisiana, Texas, New Mexico, Arizona, and California. Fortunately, only the last one gave me a ticket. The rest laughed helplessly. What astounded us, throughout the East, was that private citizens would go to great lengths to inform us that we had what they called "No TAGS"! West of the Mississippi, no one cared but the police.

In Philadelphia, Alice and I decided to christen our chariot "Able" (for A), but hoping, too, that he would prove "ready and willing." We agreed to head south toward the sun, and do as much sightseeing as possible. We began the next morning with Philadelphia.

As we were being swept along in five lanes of traffic in front of Convention Hall, we stopped at a red light. A young policeman walked over and, patting Able on the hood, said "Too bad. Only hitting on four." The engine promptly died, and refused to start. Our policeman stripped off his white gloves, carefully lifted the hood, and peered in desperation at the grimy mess inside. "You're a mean man, Jack," said another policeman. After a half hour of vain effort while traffic

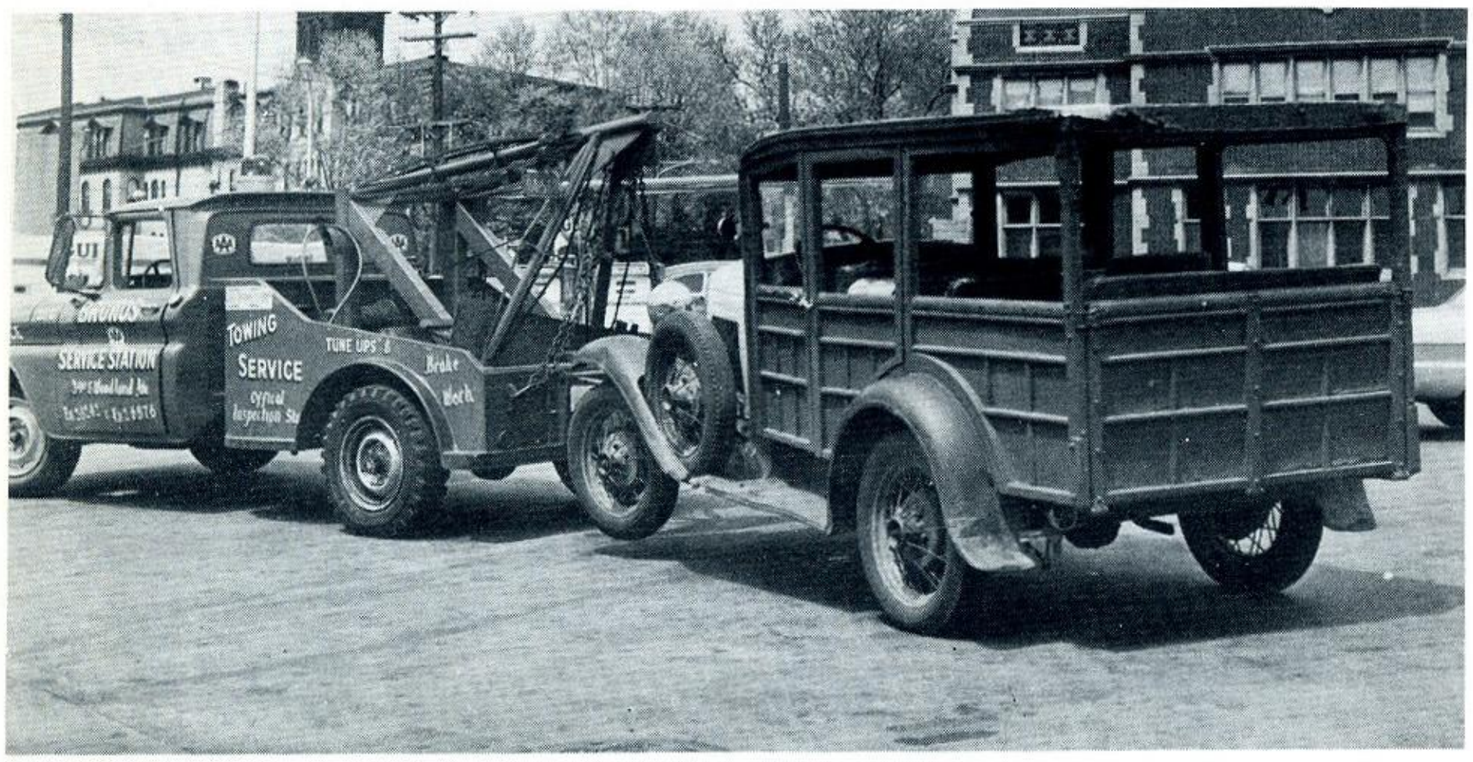

The timing gear "went" in Philadelphia

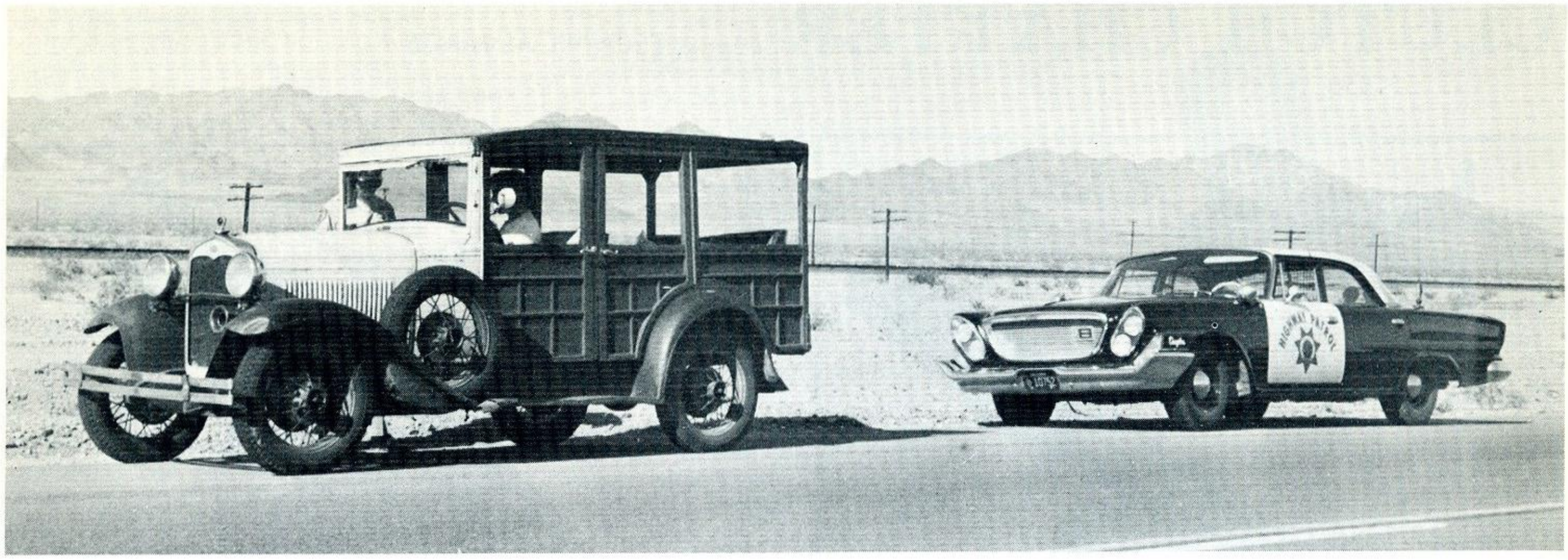

eddied about us, we were towed away. It took a garage a day to locate and replace the broken timing gear. All the crew of Smiling Jack's Garage turned out to wave us off.

After a two-day tour of the national capital, we were headed south from Alexandria when a terrible thumping telegraphed the news that our bearings had gone. Naturally, this happened at six o'clock on a Friday evening, eighteen miles from the nearest town. However, we were able to coax Able into the drive of a pleasant roadside motel. The manager, a Mr. Raab, was most helpful, trying to locate a mechanic. But he did have a disconcerting habit of bursting into hysterical laughter every time he looked at Able.

At this point, I decided to call Scott in San Francisco, and he told me to stand by. A half hour later, he called back. With some luck and by coincidence, he had contacted the Model "A" Restorers Club president, Ed Breedon. The MARC president resourcefully checked the club roster and suggested that I call a club member by the name of Henry Snow, who lived at Lorton, near Alexandria.

I called Mr. Snow and he said he would come in the morning and take a look. But shortly after we had gone to bed, there was a pounding on the door. Mr. Snow had arrived with his 17-year-old son, two other boys, and a tow bar. They swarmed over Able, tied him to the tow bar, and told us to come up the next morning.

Next morning, courtesy of Mr. Raab and a Greyhound bus, we moved some 40 miles north to the roadside store that was Lorton. Mrs. Snow came to pick us up, and drove us around winding roads to the clearing in the woods where they had hewed out their home. The two houses they had built themselves shared the clearing with several garages and numerous Model "A's"

Inside a locked garage was a beautifully restored "A" station wagon, minus the motor, which was out being rebuilt. Beside it was a newly restored coupe, with engine in place but not connected. Henry Snow said the Tudor was owned by 19-year-old John Girard, who had been working on it for months, and planned to take it to a show the following week. He suggested that our best bet would be to induce young John to sell me the motor.

Able's motor was removed and found to be a mess. It took all day, with constant coffee breaks, to persuade John to take pity on me and sell his motor. It had been generally rebuilt and assembled at a shop in Alexandria. Transfer of the motor began about dinner time and as it stretched into the night, we moved to a motel.

At 10:30 the next morning, the engine started briefly, then stopped. Henry Snow tinkered and cogitated, wearing the "God - knows - what's - wrong" expression familiar to all auto fanciers. With cheers from all, we were on our way by Sunday afternoon.

Able was in tune with the lovely spring we enjoyed as we saw the sights of the colonial South, visited the beaches, resorts, and battlefields.

Everywhere people talked to us. Constant conversation was the rule. One trucker shouted, "Going to New York?" and laughed uproariously. Another covered his eyes and said, "I don't believe it! I don't believe it!" We heard many tales entitled "My First Date in the Rumble Seat of a Model 'A'," or "The First Car I Ever Owned." We were exposed not only to the warm breath of spring in Georgia and the blasts of a sandstorm in New Mexico, but to the human beings along the route. We began to feel sorry for the other travelers on the road, insulated from cold weather and warm humanity.

Some things were inexplicable. Why were there no beer cans and roadside litter until we reached Louisiana? Why did service station attendants in the East almost never wash our windshield, while west of the Mississippi it was cleaned at every stop?

(Continued on Page 15)

Hank Snow to the rescue

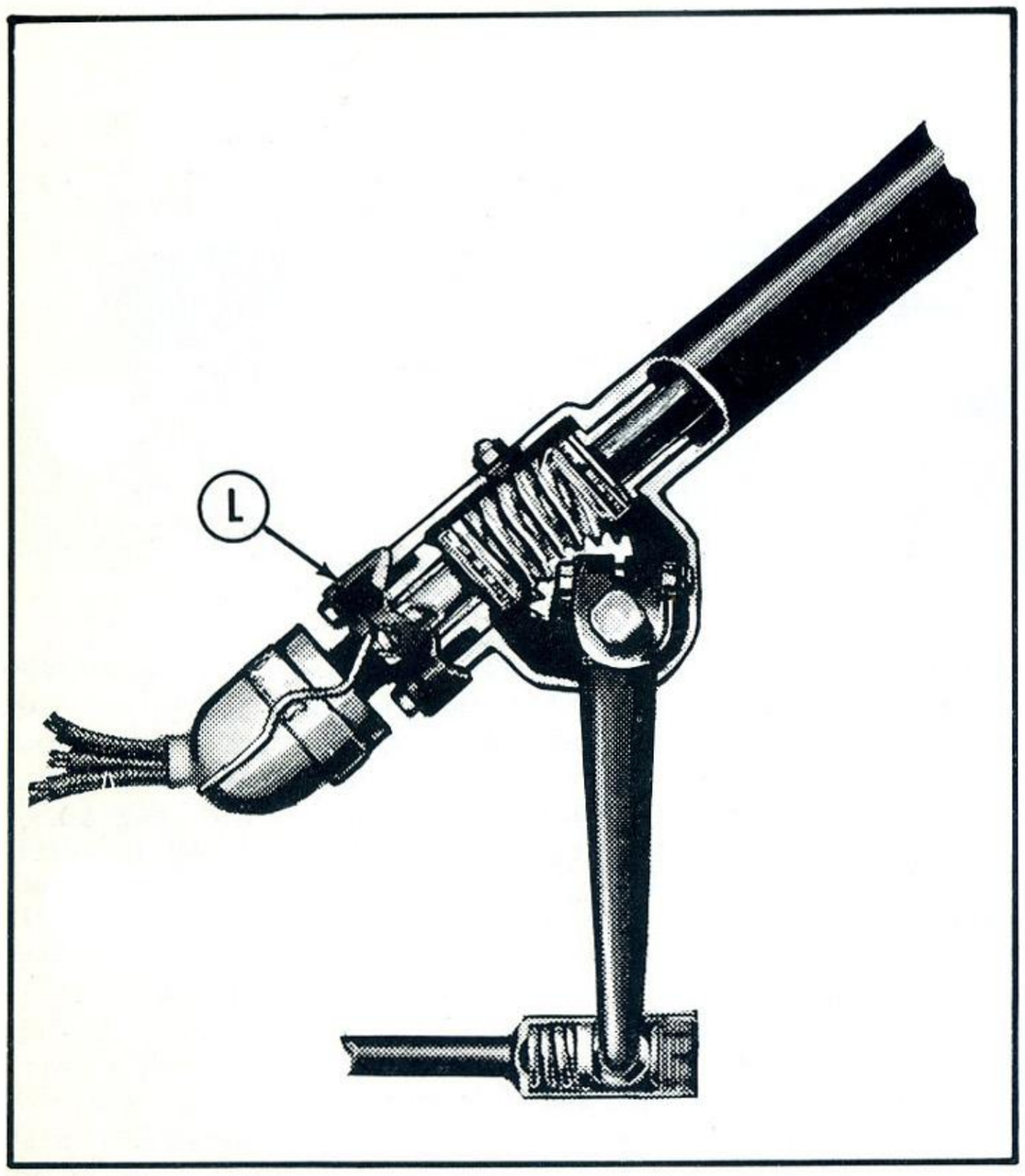

Seven-tooth sector gear

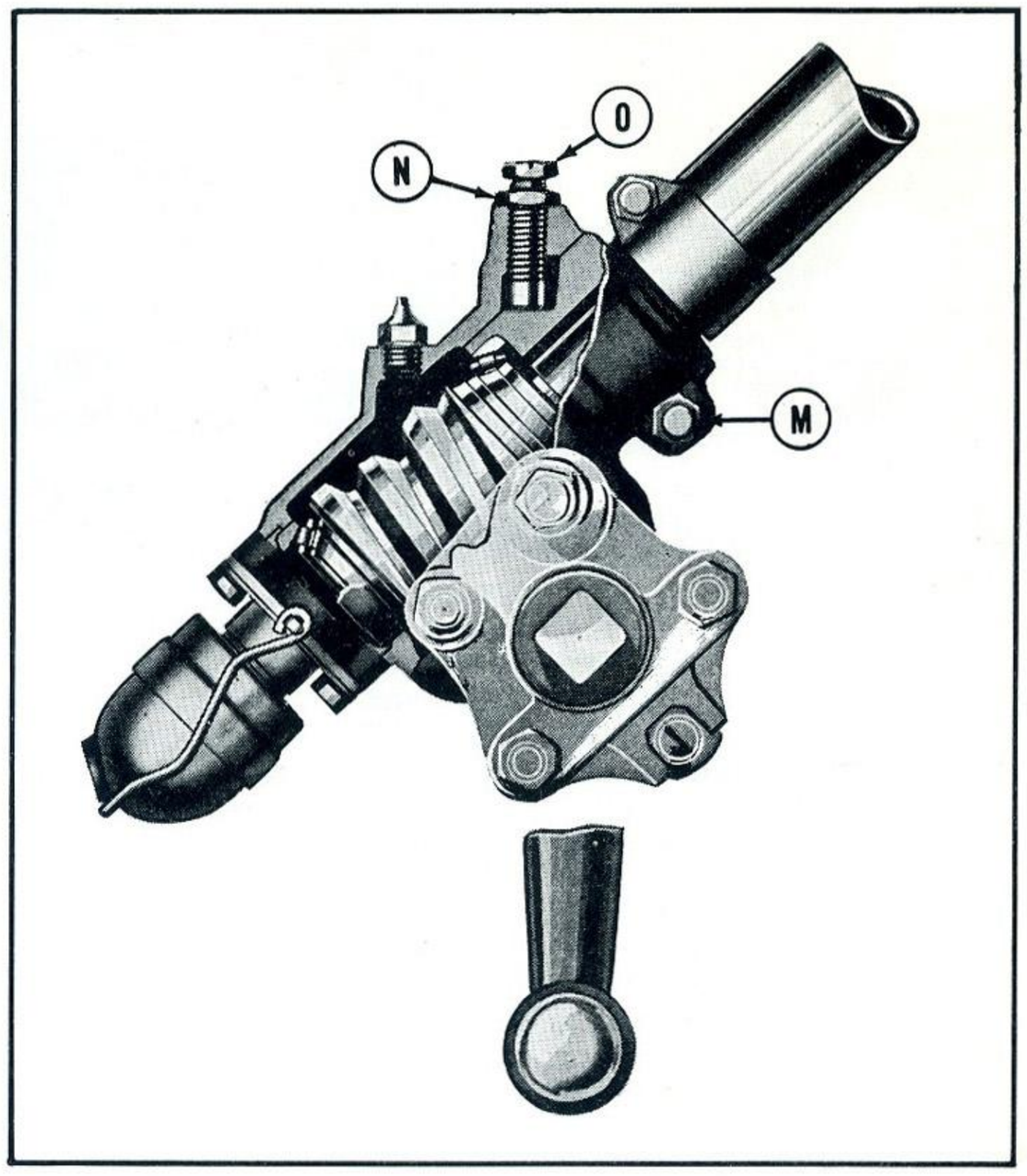

Two-tooth sector gear

Suggestions for Better Steering

Under any traffic condition, the steering wheel, more than any other item on our Model 'A,' is in constant use; and any pleasures that we can derive from driving is largely determined by ease of steering. In order to make the car steer more easily, the front axle is designed to give the wheels a tilt so as to bring the portion of the tire in contact with the road more nearly under the spindle body bolts. This tilt tends to make the wheels run out or away from each other. To counteract this action, the wheels are given what is known as "toe-in." At first, the toe-in dimension for the Model "A" was given as 3/16 to 1/4 inch, but it was later found that a toe-in of 1/32 to 3/32 inch causes less tire wear and gives easier steering.

Many front-wheel alignment garages no longer possess data for setting toe-in on the Model "A". However, you can save some money and do a good job right at home with nothing more than a wooden 2 x 4, a couple of boards and a few nails. But before the wheel alignment is attempted, it is advisable to reduce the play in the steering gear and linkages to a minimum.

When the Model "A" steering gear was designed, Ford's engineers took into account that eventually some parts would wear and, therefore, several adjustments were provided. A screwdriver and ordinary wrenches are the only tools needed to make these adjustments. To determine if these adjustments are needed, check the amount of play in the steering wheel. If the amount of play exceeds 1 1/4 inch, one or more of these adjustments may be necessary.

There are three adjustments which can be made with the steering gear assembled in the car, namely: end play in the steering shaft, end play in the worm sector, proper mesh of sector teeth in worm (two-tooth sector-type only). In order to effect satisfactory adjustment, *the drag link should be disconnected.*

Steering Shaft End Play

End play in the steering shaft on the early seven-tooth sector worm can be reduced by removing one or more of the brass shims which are (or should be) between the lower end of the housing and the end plate, better known as the lower bearing assembly. These shims (A-3559-AR) were made in three thicknesses and are used to take up any end play in the steering shaft. Refer to drawing at (L).

On the later design two-tooth sector, a worm adjusting screw is provided at the top end of the steering gear housing. To adjust the worm for end play, turn the steering wheel to either end stop, then back up 1/8 of a turn. This leaves the steering shaft bearing free of side thrust. Next, loosen the housing clamp bolt (M) and the lock nut (N) on the worm adjusting screw (O). Turn down the adjustment screw tightly, then back off 1/6 of a turn. Then retighten the lock nut and the housing clamp bolt.

Worm Sector End Play

End play in the sector shaft of either design, seven-tooth or two-tooth sector, can be corrected by turning the steering-worm-sector thrust screw located on the side of the housing next to the motor. A special offset screwdriver is required for this adjustment.

First, check that the housing cover nuts are tight. Next, turn the steering wheel to either extreme, then back up ⅛ of a turn to remove load from the sector. Gripping the steering arm at the sector shaft hub, push and pull to feel for end play. To reduce end play, loosen the thrust screw lock nut (P), turn the sector thrust screw (R) tightly, then back off ⅙ of a turn. When correct adjustment is obtained, be sure to tighten the lock nut, keeping the screwdriver in slot to prevent the screw from turning.

Sector Teeth Mesh

Adjustment for proper mesh of the sector teeth in the worm can only be made on the two-tooth sector design. Turn steering wheel to the mid-position of its complete travel or turning limits (drag link previously disconnected). Next, loosen the three housing cover stud nuts (S) exactly ¼ turn, then loosen housing cover adjusting stud nut (T) ½ turn. Turn the eccentric adjusting sleeve (U) clockwise, very gradually, checking at each movement the amount of play still existing at the steering arm. Adjust only sufficiently tight to eliminate all lash at steering arm (no more), being sure to finish movement of the eccentric adjustment sleeve (U) in the clockwise direction. Turn the steering wheel throughout full travel to test for free operation. If too tight, turn the eccentric adjustment sleeve counterclockwise to free, and readjust more carefully as above. Next, securely tighten the housing cover adjusting stud nut (T) and follow by tightening housing cover nuts. It is important that the adjusting stud nut be tightened before tightening housing cover nuts.

With the foregoing adjustments to the steering gearing being complete, reinstall the drag link.

Tightening Ball Plugs

Another item which invariably is overlooked in setting front wheel alignment is the ball plugs at the ends of the drag link and ends of the spindle tie rod. After 36 years of use, the steering arm and spindle arm balls will have considerable wear. Remove the cotter pin and, with a large screwdriver, tighten the ball plug. Do not re-use the old cotter pins but replace with new ones.

Front Wheel Alignment

To make the front wheel alignment gage, you will need a 2 x 4 about 64 inches long; two short boards, 1 x 3, 18 inches long; and a handful of nails. Construct the gage as shown on the drawing suggested by Ernest Flinkman, Michigan Region.

Jack up both front wheels so that the nails line up with the center of the hub caps and place the gage in back of the wheels so that the nails touch the tire. Rotate wheels sufficiently to cause a fine line 2 or 3 inches long on the tire. Rubbing some white chalk on the tire, in advance, will help to show up the line.

Remove the gage from the back and place at the front of the wheels. Also, rotate each wheel 180° so that the mark on each tire will be at the front of the wheel. Next, locate the gage so that the nail point on the right side centers on the mark on the right tire. Walk to the opposite side and rotate the left wheel so as to cause a second line on that tire. Measure the distance between these two lines to determine the amount of toe-in.

Note: At the start of the article, the dimension for toe-in was given as 1/32 to 3/32. This is only true when using an original type wheel alignment gage. The dimensions for the homemade gage should be 1/16 to ⅛, because it is measured at the outer circumference of the tire.

If adjustment is required, remove the cotter pins and loosen the two spindle tie rod end clamp bolt nuts, then turn the spindle tie rod either in or out to approximately correct the toe-in. Each time the tie rod is rotated you must check toe-in again from the beginning by erasing the lines on the tires and scribing new ones. This trial and error procedure may have to be done several times before the correct toe-in is obtained. When the correct toe-in is obtained, tighten the two connecting rod clamp bolt nuts, making sure to replace the cotter keys.

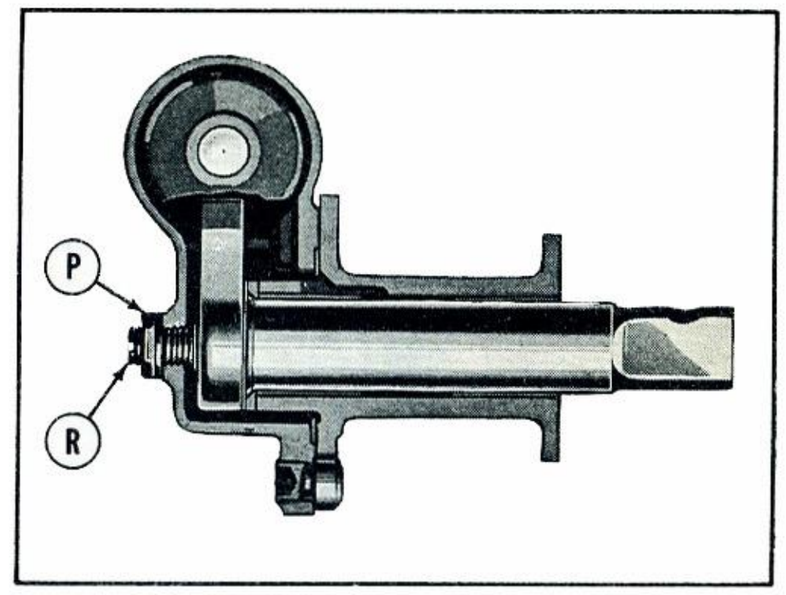

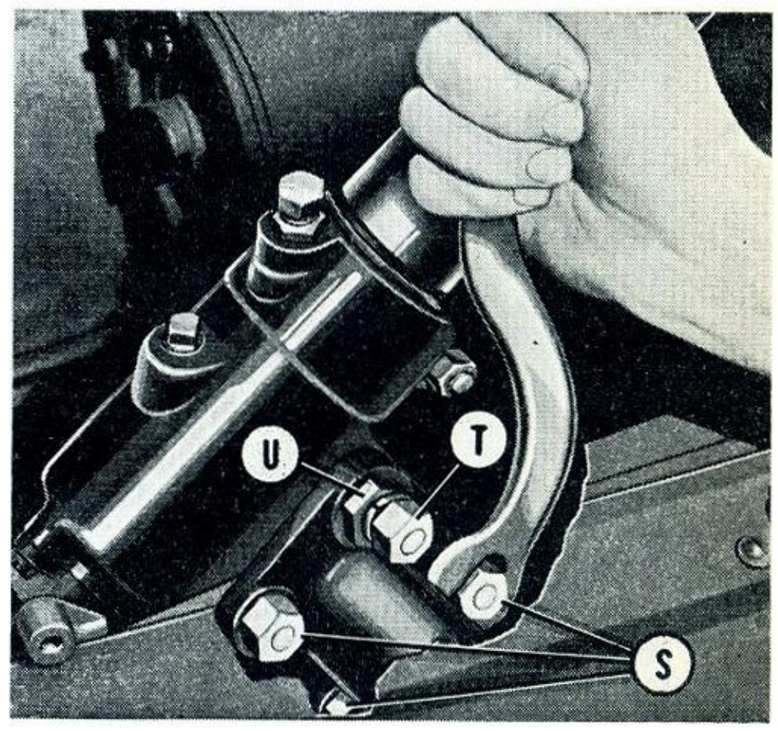

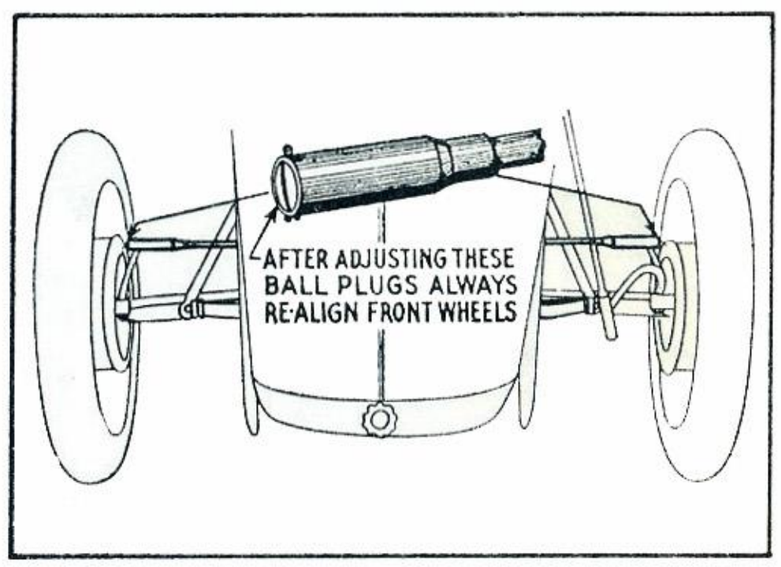

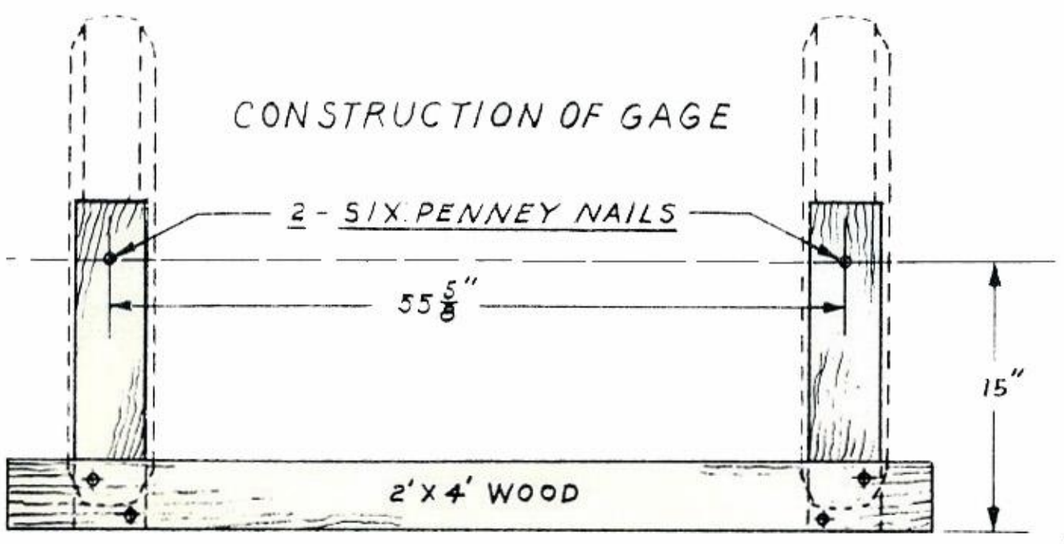

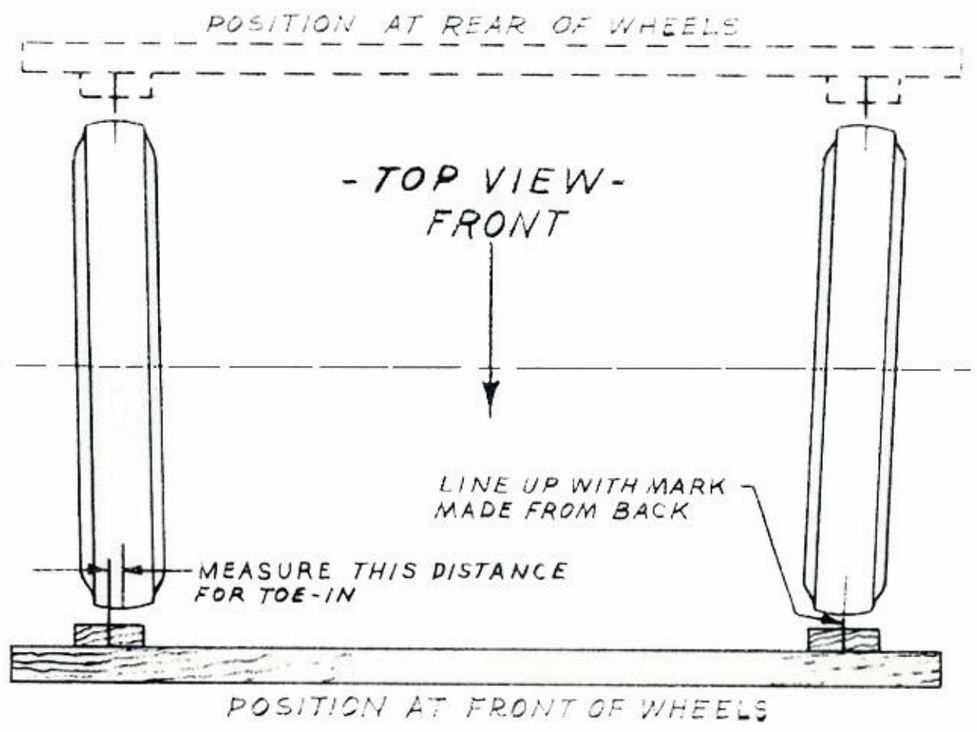

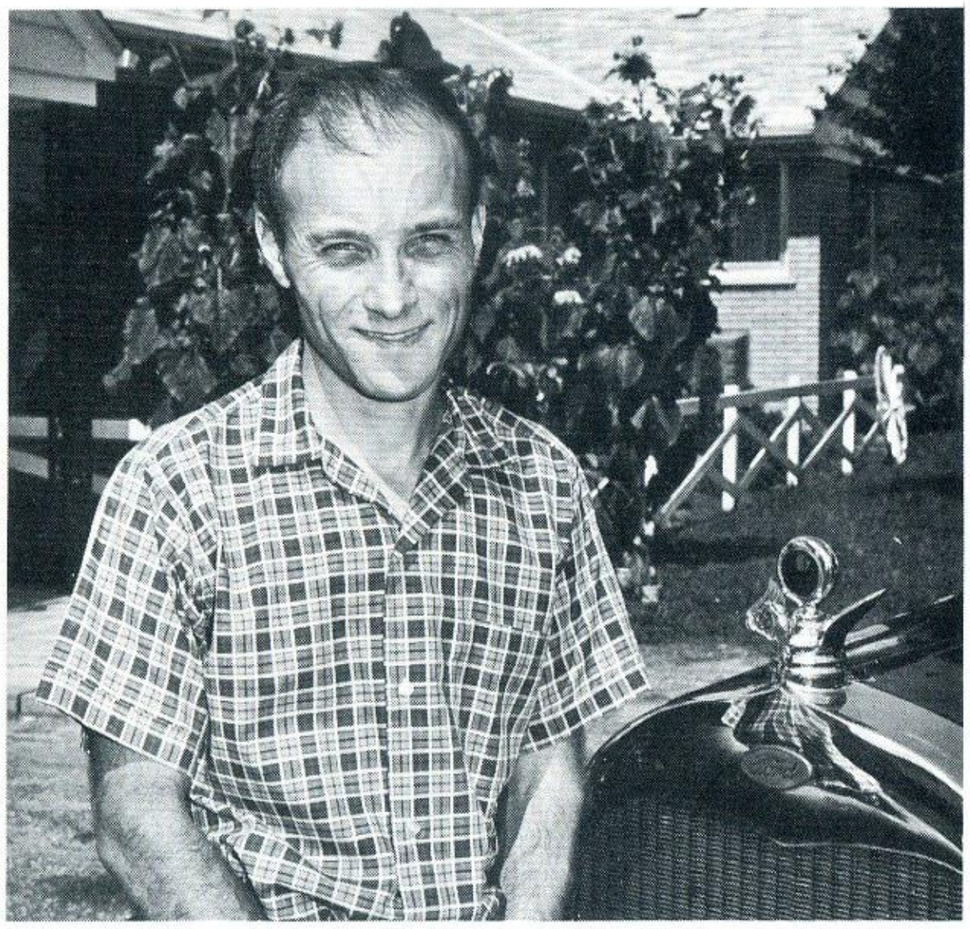

CARL BELL, of 5721 Livernois, Troy, Michigan, has been a member of the Oak Leaf Chapter, M.A.R.C., since 1960. In addition to the phaeton, Carl has a 1930 Sport Coupe which won the 1963 Michigan economy run by attaining 28.0 M.P.G.

MAR

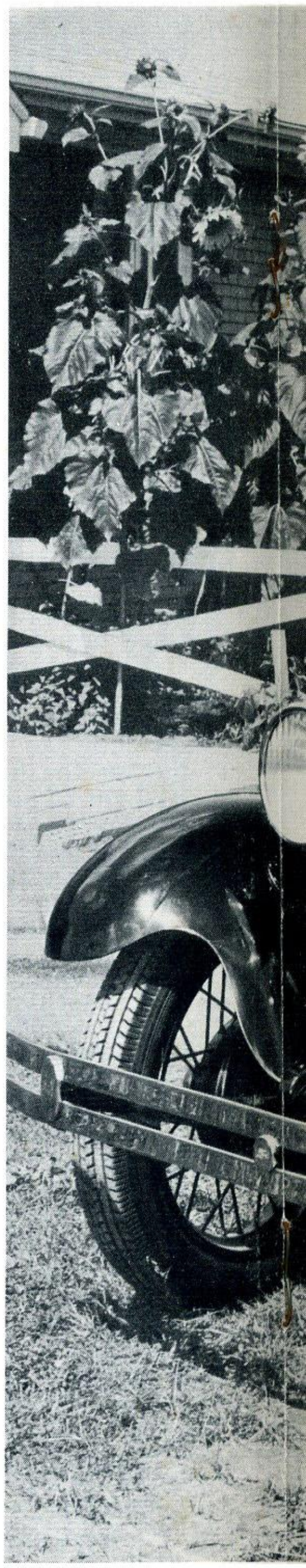

CAR OF THE MONTH

ABOUT THE CAR—This beautiful Niagara Blue Phaeton is one of the very few early 1928 models. Its restoration job was recently completed and it will make its first appearance at the Michigan Region Judgment Day Meet on October 4, 1964.

The car which was built in Canada, engine number CA-2,123 was first purchased from the original family by fellow club member Clyde Hale of Utica, Michigan. It features such early items as: multiple disc clutch, solidly mounted engine, 5 main bearing camshaft, power house generator, early Abel type starter, fan shrouded radiator, open end bumpers, early "AR" wheels and the combination single band foot brake and emergency brake.

The restoration was three quarters complete when it was purchased by Carl this year.

RC SHOWCASE

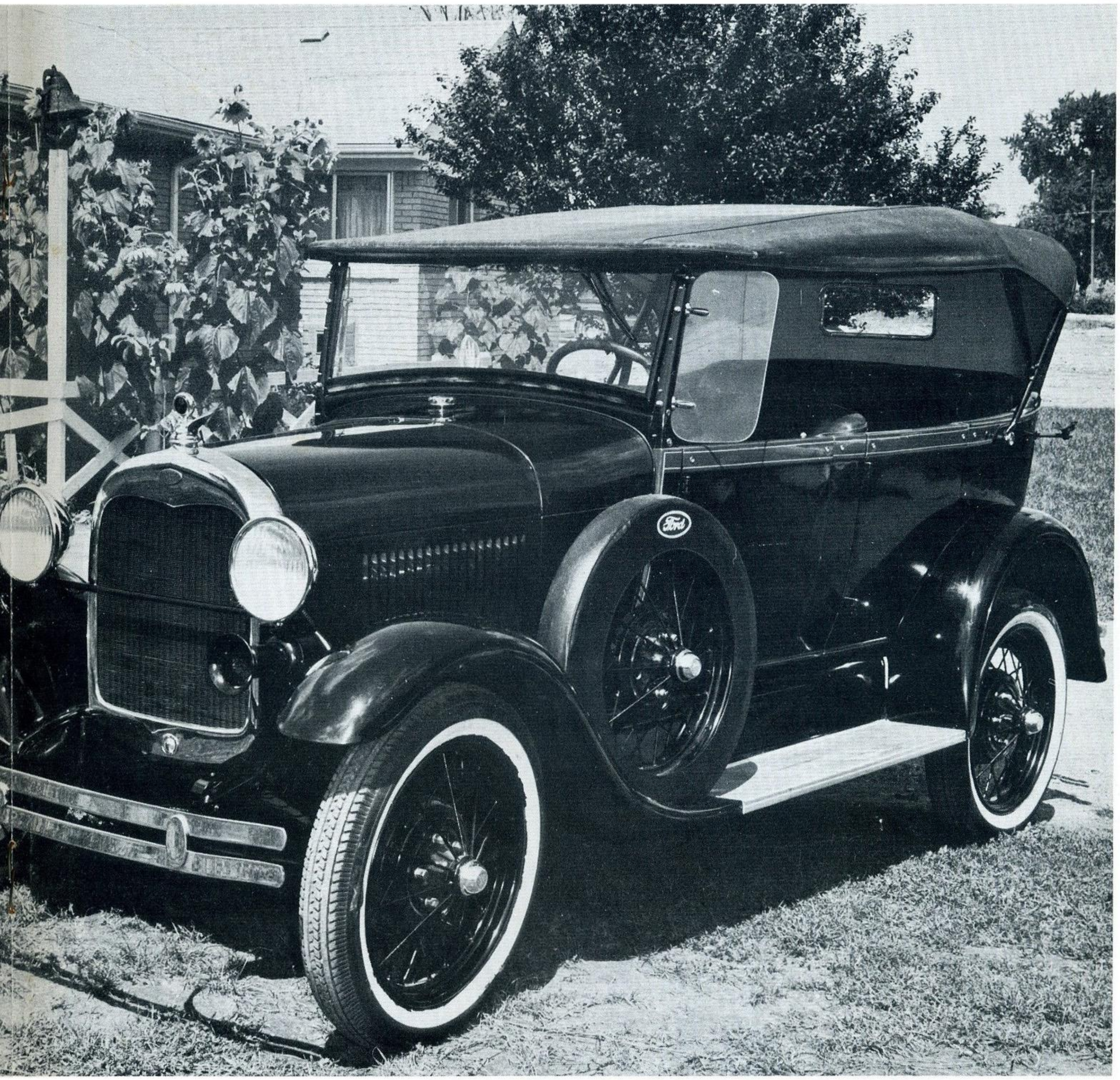

The Moment in the Paris Mode

Chanel's smart sports suit is of navy moussa and blue, black, and white-striped djersakasha. The unusual skirt is box pleated on the left side and circular on the right. Agnes' white straw and navy felt hat.

Lelong makes a significant ensemble with a long circular cape and wrap-around skirt of mixed beige and brown kashabure, a plain cardigan and a striped jersey pull-over jumper with a gold buckled leather belt.

Vionnet's characteristic sports frock has applications of heliotrope blue in mounting V's on sand djersakasha. The circular skirt for sports wear is chic. Blue straw hat with corded ribbon revers from Agnes.

Etta's Cetera

by Etta Francisco

The MARC News is your magazine. It is a medium of exchange of ideas. Your ideas! Use it! Do any of you have fashion contests in your regions? I would much rather be putting pictures of our own Club members in this article, rather than pictures cut out of old magazines. My name and address are in the front cover of this magazine. Send me some pictures of your members in their era clothes, and I promise you they will be put in the MARC News.

Now I have a confession to make. Our region made a fashion movie; then our family hastily got a Model "A" ready and drove it to Louisville, Ky. Ed Breedon asked me if I had seen my boss, George DeAngelis, and George said, "Hello, Etta, where's your article?" Now I would really apologize, but it was all genuine Model "A" work, and I don't think any of us should apologize for that.

George shared his home movie of building his replica of Henry Ford's 1896 Quadricycle at the MAFCA National Meet. We enjoyed our visit with George and his wife Sid.

* * *

(Continued from Page 9)

Able uttered not a whimper as he climbed over the 9100-foot pass to Taos, New Mexico, and went on to Santa Fe, Albuquerque, Flagstaff, and finally to California and our first traffic ticket.

As we started on our last, long day homeward (we had been three weeks on the road), we asked our husbands to meet at our house and we would have dinner together. We were 35 miles from home at 5:30 when a terrible banging in the engine brought us to a halt. A mechanic diagnosed it as a broken valve spring.

"Come on in anyway," Scotty said on the phone, "if it will move."

It sounded terrible, but it moved. Seeking to astound our husbands we stopped at a service station five miles out and changed our clothes, putting on high heels and mink stoles.

They, too, had decided to astound us by rounding up a welcoming crew of friends and neighbors, complete with confetti and a photographer. It was a great homecoming.

Now the Station Wagon is in the process of restoration and John Girard's engine has been returned to him in West Virginia.

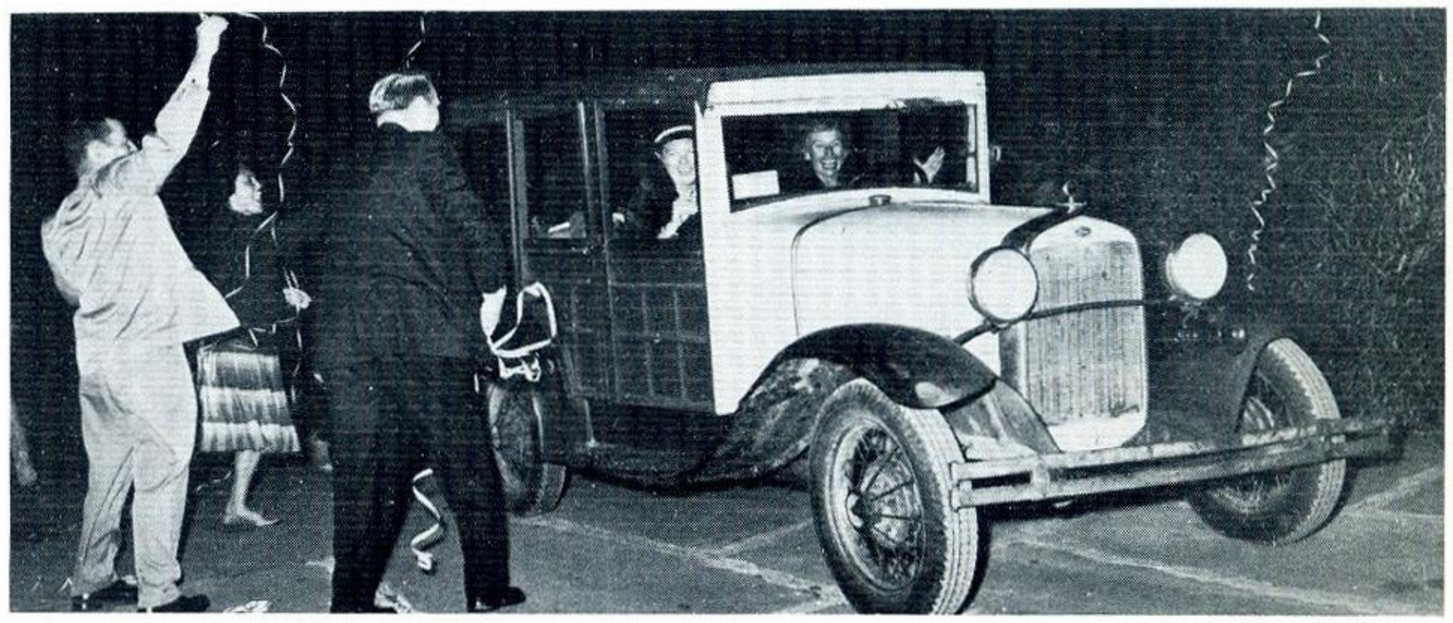

MARC TEN YEARS AGO

By Richmond Bell MASSACHUSETTS REGION

In October, 1954, the Hunter Field Trial Meet was held in Avon, Conn., drawing Model "A's" from all states from Maine to Maryland. This was the largest Meet in which MARC had participated up to that time, with 28 MARC cars participating. There were several beautifully restored cars there, and others ranged in condition down to hay barn wrecks. I remember particularly that Harry Smith of New York was driving a mint original Roadster, perfect in every detail. As this Meet was joint with the Horseless Carriage Club, they assigned Mr. Henry Cave, a pioneer auto builder, to judge the Model "A's." The winner was Donald Day of New Jersey, with a Roadster that by today's standards would clearly be in the Modified class. The decision of the sole judge was not in accord with the feeling of most "A" owners there who felt that the car selected had too many modifications. This provided a starting incentive toward the Club developing a system of judging for future use. Mr. Day had a fine car, but it was modified in several respects, had 16" wheels also, and his winning a first prize pointed up the need for better judging standards in the future.

At this time, a sharp-eyed member observed that the inside tailgate handle on his 1954 Ford Ranch Wagon was the same as the inside handle on his Model "A" Roadster. I believe that every true restorer has known about this for years now, but the MARC News of October, 1954 carried the tip-off to the membership. Also, at this time, a California member commenced making terminal box covers and wing nuts, thus solving one more problem faced by the restorer.

R. E. Stockton of Urbana, Ohio, made a visit to the Archives Department of the Ford Motor Company in the fall of 1954, while gathering data to help him in the restoration of his car. He wrote MARC News about what he found there, and he had spent considerable time in the Library of the Henry Ford Museum, as well as in Archives. He found considerable material of help in the project of restoring his 1928 Phaeton, and met Mr. Dave Crippins and Mr. Henry Edmunds of Archives. They expressed considerable surprise and interest to learn of the existence of the Model "A" Restorers Club, and they asked if they could receive a complimentary copy of MARC News each issue. They, in turn, expressed their willingness to furnish detailed information from their files. Mr. Stockton reported that the Ford organization had an intense interest in the restoration of their products.

In my last column, I mentioned the names of members listed in the June, 1954 Roster, who are still members today, and who I believe have held continuous membership. It took a lot of time to go through the original 225-250 members' names to check them out in the later Rosters, and I very much regret that I missed Russell Gerrits of Chicago. Russ was very much a member then, as he is now, and I recall meeting him personally in 1955 when his 1931 Roadster took a First Place at the National Meet in Dearborn—the first National Meet ever held. My apologies to Russ, and to those of you who have back issues of Motor Life magazine, you will find a photo of his car and a nice write up on MARC.

A supplementary Roster came out in November, 1954, listing members joining from June 1, 1954 to November 1, 1954. This was a period of rapid expansion for the Club, due mostly to publicity from writeups in several nationally circulated car magazines. Gerald Cheatham and Donald Richards, both of Alabama, joined during this period and are still with us. Walter A. Smith of Shelton, Conn., is the only one from his state still listed today from the members joining during that time. Others are Dr. Raymond Scallon of Minneapolis; Eugene Daley of West Newton, Mass.; and Maxwell Brown of Staten Island, N.Y.

Price comparisons of 10 years ago, with today's prices, are always interesting. Many advertisers do not quote prices, but from ads that did, I copied the following from MARC News of September, 1954. "1931 Victoria, good condition, rebuilt engine 18,000 miles ago, price $95." Or how about "emergency and service brake anti rattle sets $1 postpaid" or "muffler inlet clamp sets, .75 pair."

(Continued from Page 3)

Dear Editor:

I've been a member of the MARC News for the past two years and enjoy reading it very much. I also belong to the San Gabriel Valley Region, and have restored a 1930 Deluxe Coupe.

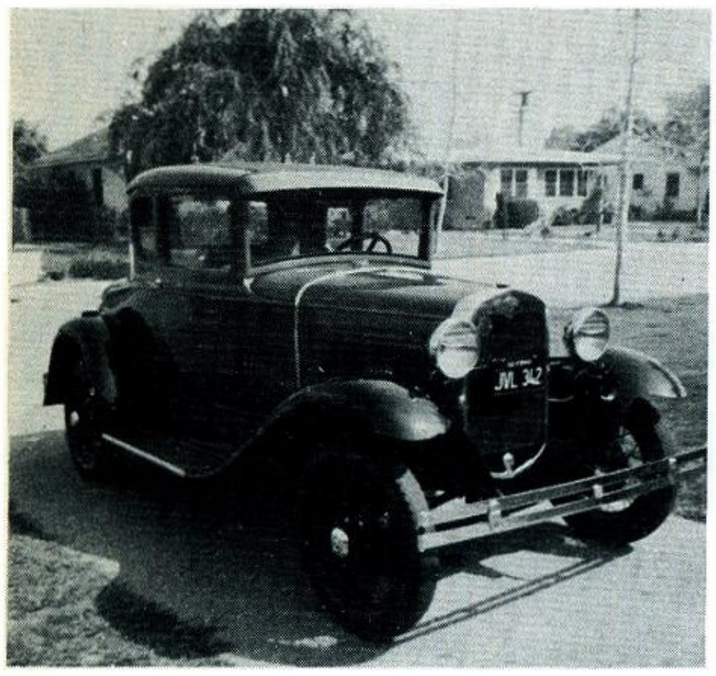

Now I have purchased a 1929 pick-up truck, with hardtop, which I want to restore, and in all the past MARC's, there has been no information on this model. Would appreciate you sending me any information you have regarding the color, interior, striping and wood used on cab and bed. Are the headlights painted the color of the truck or are they black? Is the radiator shell black or is it the color of the truck? Is there a bumper on the rear?

Glenn A. Johnson
11110 East Lynrose Street
Arcadia, California, 91006

The standard body color for commercial vehicles was Rock-Moss Green, but many were painted whatever color was desired by the fleet buyer. The rear window frame was usually painted black. Striping for the Rock-Moss Green was French Gray. The upholstery was black artificial leather and the seats were without pleats. The door panels were black-coated cardboard to match the seat fabric. Wood was generally hard maple, painted body color inside the cab and box.

The radiator shell and the headlamp case assembly was painted black, and the headlamp door was nickle-plated.

A bumper was not provided on the rear.

Dear Editor:

Thanks many times for the May-June issue of M.A.R.C. News and the comprehensive article on the 1928-1929 Model "A" Standard Coupe.

Work on my 1929 Standard Coupe is progressing nicely, thanks to the last issue; however, I've a question that has me stumped on my "A".

I have the side-mounted spare tire on the driver's side. Now, when this accessory was provided, what disposition was made by the factory for the holes in the rear back plate below the trunk lid? Were the holes filled in and sanded smooth, covered by washers and bolts or what-all?

Keep up the fine work on M.A.R.C. News. Hope to have my Model "A" coupe out of baskets and assembled and on the road within a month.

R. E. Davis
417 Wheeler Avenue
Reno, Nevada

The holes on the back of the Model "A", after the spare tire carrier was removed, were plugged with a special snap-in plug button and then painted over to match the body. This practice is still in use today on modern cars. With a little hunting I think you can find one to fit at a modern bump shop.

TECHNICAL HINTS

From Calumet Chatter

A small length of rubber hose, clamped or wired to the overflow pipe on the radiator, will allow water overflow to run under the car and not down into the front spring. This will prevent a major cause of rusting in the front spring leaves.

Just above the floorboards, at the base of the firewall, you will find snaps that will fit the buttons used on tops. If these buttons are added to your floor mat or rug, they will keep the mat in position very nicely and neatly.

The next time you remove the engine side pans, add a nut to hold the bolts in place while you are installing the pans and adding the nuts to hold the pans in place. This also makes future removal easier. These are the bolts used in the frame edge, of course.

A regular ¼" tap run through the floorboard bolt holes will allow the use of regular, easily found bolts to hold the boards in place.

If your sun visor is removed, it is possible to slide the windshield off the hinge. Some penetrating oil will ease it along.

When recovering running boards, use linoleum cement to glue them down. It works well and is low in cost. Have a pair in service for six years.

CAREFUL OF "GIP" PARTS

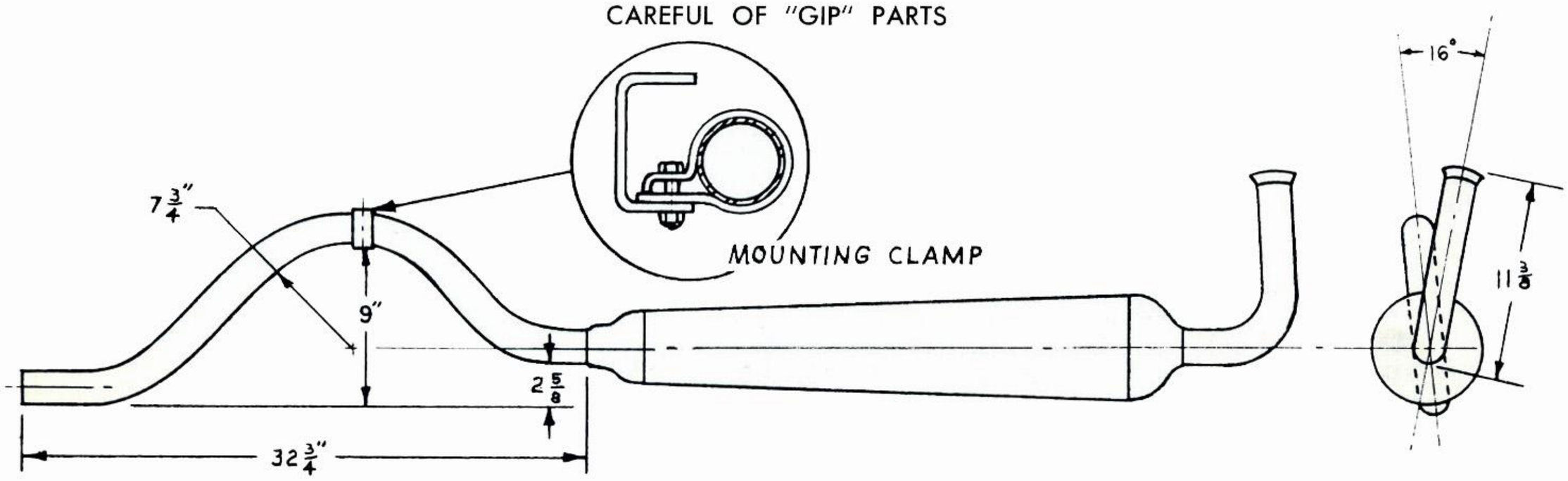

It has come to the attention of the technical editor that some of the tapered mufflers on the market today do not fit the Model "A" as they should. When installed, the inlet pipe will interfere with the engine splash shield and the outlet pipe will be directly in line with the rear axle, rather than 2½ inches below it.

Comparing the muffler with the original drawing indicated that the greatest points of variance are the angle of the inlet pipe and the large radius at the tailpipe. By heating these areas, the muffler can be reshaped to give good visual appearance and satisfactory performance.

If you are in the market for a new muffler, it is suggested that you study the drawing and familiarize yourself with the important dimensions.

Articles of Interest in Past Issues

Following is a list of articles which have appeared in the past issues of MARC News:

Technical articles

Seal Beams for your Old Headlights; January-February, 1963

Wiring Harness; November-December, 1963

Servicing the Fuel Tank Gauge; June, 1961

Repairing the Ignition Switch, October, 1961

Repairing the "Pop-out" Ignition Switch; November, 1961

Function of the Model "A" Carburetor; August-September, 1962

Rebuilding Model "A" Zenith Carburetor, February, 1962

Stop Carburetor Leaks; March, 1962

The Model "A" Brakes; December, 1962

Multiple Disc Clutch; July-August, 1963

Installation of Model "B" Engine in a Model "A"; October-November, 1962

Rebuild "A" Shock Absorbers; December, 1961

Stone Guards; July, 1961

How to Install a Rumble Seat; March-April, 1963

Model "A" Tool Kit; May-June, 1963

How to Use the Parts List; November-December, 1963

That Finishing Touch (Painting); January-February, 1964

Replacement Model "A" Floor Mats; March-April, 1964

Engine Electrical System; May-June, 1964

Authentically Speaking

1930-31 Tudor Sedan; May-June, 1963

1928-29 Roadster; July-August, 1963

1930-31 Coupe; September-October, 1963

1928-29 Fordor Sedan (2 Window); November-December, 1963

1929 Fordor Sedan (3 Window); January-February, 1964

1930-31 Roadster; March-April, 1964

1928-29 Coupe; May-June, 1964

Station Wagon; July-August, 1964

Feature Articles

A Newcomer Challenges the Model "A"; January-February, 1963

The Working Girl (1930 Tudor); May-June, 1963

Model "A" Madness; November-December, 1963

The "A" Mechanic Who Never Was; January-February; 1964

Collecting Model "A" Literature; January-February, 1964

My Forty Years With Fords; March-April, May-June, July-August, 1964

Model "A" Body Processes May-June, July-August, 1964

Ducks Unlimited Field Engineer Rod Galbraith, whose territory covers much of The Pas area in northern Manitoba, adapted an old model "A" Ford Chassis and motor to operate over difficult northern terrain during the winter and early spring months. He is shown here making one of his inspection trips at the Hudson's Bay Ditch control near the Manitoba-Saskatchewan border.

Can You Help?

Your MARC News technical staff is attempting to assemble an interior trim book with cloth samples. We already have the written description and specifications and we would like to supplement these with the actual cloth. If you have a Model "A" with original interior trim that needs replacing, and if you will be replacing it soon, please cut out a square piece 6" x 6", identify it as to car body style and from what location on the car it was taken. Mail these samples to *Technical Editor, Box 1930A, Dearborn, Michigan.*

ANTIQUE VEHICLE

OWNERS

Motomart has provided many publications and services in your field since 1953—for example: Ford Wiring, Magazine on Old Cars, Data Books, Wiring Diagrams, Ad Sheets, and the useful and well-known Directories.

Write for Current List, or send $1.00 for sample of

3 DIFFERENT PUBLICATIONS

MOTOMART PUBLICATIONS
Dept. 24, Marietta, Ga. 30062

ATTENTION CAR ENTHUSIASTS
subscribe to
CARS & PARTS

The automotive publication that gets advertising results. National circulation since 1957. Buy, sell, swap, your antiques, classics, and parts for same. FREE 20 word classified ad with $2.00 yearly subscription. It's worth it.

NAME_____

ADDRESS_____

CITY_____

ZONE_____STATE_____

P.O. Box 30081 AMF
Memphis 16, Tenn., 38130
A monthly paper

REGIONAL NEWS

HUDSON VALLEY REGION:

The Hudson Valley Region has been participating in meets in every geographical direction from our immediate area, north, south, east and west. Many of our members have been collecting trophies for their restorations, and we always make a good showing wherever we attend a meet. Our new president is Richard (Dick) Elwyn of 3 Greentree Drive, So., Hyde Park, N. Y. Our new vice president is Oliver P. Kent, Jr., of Milton-on Hudson, N. Y. Our secretary is Evelyn Butler of Rd. #1, Wheaton Ave., Fishkill, N. Y., and our treasurer is our old dependable friend again, Carlton Fitchett of 128 So. White St., Poughkeepsie, N. Y. We have elected a new board of directors and a new editor (yours truly), and a co-editor who does all of the typing and the (hard) work, Arlene Borrell.

Although we are not large in numbers we do claim members from four states: New York, New Jersey, Connecticut and Massachusetts. We have this year participated in meets at Atlamont, N. Y., Westport, Conn., Union Conn., Johnsville, Pa., Louisville, Ky., Forham Park, N. J., and numerous big events in New York state. The Hudson Valley Region has earned its share of trophies.

We have members in our group from all walks of life. Businessmen, storekeepers, clerks, machinists, doctors, lawyers, we did have a minister a short while back. We have school teachers, students, a banker, a couple of Ford dealers and many just plain ordinary working people. Everyone seems to share the same enthusiasm and we all have the same desire: to restore, drive, and participate in Model "A"ing anywhere and everywhere.

We would like to appeal to any MARC members within our area who are not on our roster to contact any of our members, or Mr. Carleton Fitchett, 28 So. White St., Poughkeepsie, N. Y. for a membership application. Our dues are the lowest of any Model "A", or Antique Car Club in this general area. There is lots of fun, pleasure and excitement in store.

We plan to attend numerous big meets that are scheduled, such as: New Hope, Pa., New England Model "A" Meet, Fort Dix, and Hershey, Pa. So come on let's hear from you.---Johnny X.

3 RIVER REGION:

The 3 River Region held its annual road rally, or "Mark Lark," as it was called on June 14th. Planned and directed by Ralph and Don Lloyd it was a "Lark".

Thirty two cars, 28 of them were Model "A's", participated in the run that started from the Norwin Shopping Center on Route 30 and ended at a picnic grove in Oakdale.

This was one meet where no one was lost, except in answering some of the questions dreamed up by the Lloyd brothers.

Three trophies were awarded for the highest number of correct answers. First place was Carl Tyhurst, second, Dewey King and third place, Sonny Eichner. This was the second trophy for Sonny this summer.

On June 20th, eleven Model "A's" from our Club took part in a parade at the McDonald, Pa. Golden Jubilee.

Several of our members drove their Model "A's" to Louisville, Kentucky to participate in the National Meet over the Fourth of July. Gus Koch and Harry Danko were second and third place winners in their respective classes at this meet.

ORIGINAL
WIRE PRODUCTS
COMPLETE BUMPER TO BUMPER WIRING KITS
1928-1931 Without Cowl Lamps* Ord. A-1 p.pd. 9.95
1928-1931 With Cowl Lamps** Ord. A-2 p.pd. 11.95
*Includes tail lamp extension **Includes Cowl lamp harness
ALL WIRING EXTENDS TO LAMP UNITS—NOTHING ELSE REQ'D.
HEADLIGHT SOCKET KITS
1928-1931 Single Bulb Headlight p.pd. 2.85
1928-1931 Dual (2) Bulb Headlight p.pd. 4.85
1928-1931 Cowl Lamp Socket & Harness Kit p.pd. 3.25
1928-1931 Tail Lamp Extension 1.75
1928-1931 Tail Lamp Crossover (to rh t/1) & Exten. 3.50
ALL ABOVE ARE COLOR CODED, ORIGINAL TYPE WIRE
CUSTOM AUTO WIRE CO.
9105 East Garvey Ave. Rosemead 5, California

Authentic
FOR YOUR FORD
DELUXE TOP KITS
Orig. Cobra Grain Top Kit—Ready to install—Nothing else req'd.
COUPES—28-34—Size 48" x 54" Black p.pd. 9.95
SEDANS—28-34—Size 66" x 84" Black p.pd. 18.95
Contains decking, spec. padding, calking, hide-em welt and more
DELUXE WINDOW CHANNEL KITS
COUPE—28-31 Complete p.pd. 8.50
TUDOR—28-31 Front Only p.pd. 8.50
FORDOR—28-31 Front Only p.pd. 7.80
VICTORIA AND SLANT w/s MODELS
Front Only p.pd. 12.50
LARGE CATALOG LISTING ALL RUBBER PARTS .50 COIN
MOULDED PRODUCTS COMPANY
9107 East Garvey Ave. Rosemead 5, California

REGIONAL NEWS

That same weekend 21 of our Club's Model "A's" took part in a mammoth parade at Canonsburg on the Fourth of July.

Another parade at Perryopolis on July 9th saw 14 of our Club's Model "A's" in attendance. Each car taking part in the parade received a nice gift.

Our two day meet was held in conjunction with the Antique Car Club of America at Somerset and Seven Springs on July 11-12.

Twenty eight "A's" and several modern cars joined the caravan to Somerset on the 11th.

Judging was held at the High School Stadium Saturday afternoon. Three "A's" took trophies, Pat Iperigne, first place, Joe McClelland, second and Harry Danko, third.

A parade was held at 6:30 after which we attended a banquet and dance.

Sunday morning we drove to Seven Springs for a very sumptuous breakfast. Several of our members who couldn't attend on Saturday joined us there.

After breakfast we were taken on hayrides, and rode the ski lift until the rain started to come down around noon. Have had a lot of rain at our meets this summer, but it hasn't dampened our spirits.

To the ones who haven't been attending, come out and join in the fun and fellowship.---Sue Lewis.

CHESAPEAKE BAY REGION:

Another Annual Williams Grove Trophy Meet, the ninth, has come and gone. Following is a list of winners:

1928-29 SENIOR AWARD
Bill Kroh, 1929 Station Wagon

1930-31 SENIOR AWARD
J. B. Thomas, 1931 Tudor Sedan

1928-29 OPEN CLASS
1st - Levi Capp, 1929 Roadster
2nd - Jack Markel, 1929 Roadster
3rd - Paul Harnow, 1929 Roadster

1930-31 OPEN CLASS
1st - Richard Miller, 1931 Roadster
2nd - L. M. Itterly, 1930 Cabriolet
3rd - L. Swingle, 1931 Roadster

1928-29 CLOSED CLASS
1st - W. E. McCullough, 1929 Fordor
2nd - John Swager, 1929 Fordor
3rd - Larry Saltzgiver, 1929

1930-31 CLOSED CLASS
1st - Walter Updike, 1931 Coupe
2nd - G. P. W. Koch, III, 1931 Tudor
3rd - K. M. Ray, 1931 Fordor

MOST ORIGINAL CLASS
1928-29 - Gibbs Hill, 1929 Tudor
1930-31 - L. M. Kintz, 1931 Tudor

(Continued on Page 20)

1908 **1948**

FORD PARTS HEADQUARTERS

THE NATION'S BEST

We have the largest and most complete line of parts and accessories, all moderately priced, catalogs and listings

.75 Complete — Modern Shipping Facilities

Buy the finest first . . .

We pledge Satisfaction

SPECIALS TO CLUB MEMBERS ONLY*

		Each
Float-O-Motor — Conv. Kit		**15.00**
Air Maze Air Filter		**6.50**
Perch Bolt and Nut, Frt. Spring		**5.50**
Hood Shelves — Steel 1928-29	**pair**	**13.50**

STEERING GEAR KITS

29-31 Complete — 2 tooth type	**22.50**
29-31 Worm Gear, Race and Brg. Kit	**15.50**

Complete Kits include every item necessary to rebuild your steering gear.

PLEASE ADD POSTAGE TO ALL ITEMS

NEW "A" CATALOG Over 65 Pages 50c COIN

Complete parts and accessories price list, wiring diagrams, paint and color charts and hydraulic brake installation.

HIGHEST QUALITY
PERFORMANCE GUARANTEED

ANTIQUE AUTO PARTS INC.

9113 East Garvey Ave.
Rosemead 5, California
PHONE 213-288-2121
Open daily 9:00 a.m. to 6 p.m. Sat. & Sun. till 4:30
CLOSED TUESDAY

***THIS AD MUST ACCOMPANY ORDER**

(Continued from Page 19)

MICHIGAN REGION

NOTICE - The date for JUDGEMENT DAY is October 4th, 1964 at Greenfield Village. It had been previously announced for October 11, 1964.

MOTOR CITIES CHAPTER:

Twenty-five Model "A's" turned out for the downtown Detroit parade on September 10, 1964 highlighting the premiere showing of "Lively Set". The "A's" were joined by about seven other antiques and a few dragsters on trailers. The movie stars rode new convertibles, (they did not want to be too conspicuous). After the parade, everyone was treated to a cocktail party - and a nearby coffee shop, before driving home. --- Joan Grandy.

OAK LEAF CHAPTER:

Forty-one registered and 31 Model "A's" consumed 392 gallons of gasoline donated by the Mobil Oil Company for the 6th Annual Economy Run of Oak Leaf Chapter, August 16, 1964. The route covered 64 miles over farm country to Ann Arbor and back. Many questions had to be answered to determine that the driver took the proper route, and one pop stop and one stop at a farm to obtain proper information for the questionnaires. Upon completion of the run, all met at Eliza Howell Park for a picnic. Prizes were then awarded to the lucky ticket holder which were donated by many different gas stations, hardware stores, garages, dealers, Mobil Oil and individuals.

The plaques and awards were then announced by the committee, Dave Hood, Gene Janiga, and Walt Tipton. First place went to Bill Marthler with 29.2 miles per gallon. Incidentally, this is the third time Bill has held first place only to have run second to Carl Bell last year. Second place went to Don Taylor with 27.8 miles per gallon and third place went to Gene Stonebridge with 26.6 miles per gallon. The poorest mileage went to Jack Jeup who took last place and the booby prize with 13.3 miles per gallon.

All the time these events were happening, our good old corn husker and rooster was busy making fire and boiling the corn for all who wished to endure the pleasure of eating corn with that hot butter and salt. Of course, the person was non other than Pete Dennis. --- Dick Wilson.

CHARLEVOIX:

August 16, 1964, our meeting was held at Whiting Township Park on the first bad day we have had. Everyone but the hardy Morts and Hoopers ate at home or in a restaurant. Two new families came. The Orlo Wildfongs of Mancelona and Arlo Gokee of 110 E. Lake St., Petoskey. Both had Tudors. A '31 and a '30 respectively. Eight Model "A's" showed up. The Mathers drove two - the four door and the new '29 Roadster Pick-up. Dr. Hoffman came with his Hudson Roadster for a short time. --- Bob Hooper.

MARC Club Merchandise

CAR EMBLEM $2.50
For mounting on your 'A' or on your second car'. Blue and black on silver. With mounting holes for installing.

DECAL . . . . . $ .25
The Official MARC emblem in full color for windshields, etc. Attaches to glass, metal or wood. . Five for $1.00

PRINTING MAT . . . . . $ .75
For your printer to reproduce the club emblem on letterheads, programs, stationery, or for any printing use.

MARC JEWELERY. . . . . .
Lapel pins $1.05
Tie clasp 1.60
Cuff links 1.85
Ladies earrings 1.85
Key chain 1.85

CLUB STATIONERY. . . . . .
100 sheets . . . . . $ 2.00
200 sheets 3.75
500 sheets 9.00
1000 sheets 17.00

MARC NEWS
No issues prior to Jan., 1961 are available.
Prior to June, 1962 - $.50 each.
June, 1962 and after - $.75 each.

— ALL ITEMS SENT POST-PAID —

THE MODEL A RESTORER'S CLUB, INC.
CLUB MERCHANDISE
P.O. BOX 1930A DEARBORN, MICHIGAN

CUT ON DOTTED LINE

Part No.	Name of Part	Year	LIST PRICE Lots of 100 per lot	LIST PRICE Each	No. Req. per Car
A-14578-D	Head lamp wire conduit assembly—non-metallic—AA Chassis—76B, 78A, 79B, 82B, 85B, 88A, 88B, 89A, 185B, 225A	1930-31	.....	$0 18	2
A-14581-B	Head lamp wire conduit ferrule	1928-31	.....	05	.....
A-14582-A	Horn wire conduit assembly	1928-31	.....	20	1
A-14582-C	Horn wire conduit assembly—non-metallic—AA Chassis—76B, 78A, 79B, 82B, 85B, 88A, 88B, 89A, 185B, 225A	1930-31	.....	20	2
A-14584-AR	Head lamp plug	1928-29	.....	03	2
A-14584-BR	Head lamp plug	1929	.....	02	2
*B-14584	Head lamp plug (was A-14584-D)	1929-31	.....	03	2
A-20026-R	Screw (plug terminal)	1928-29	.....	05 dz.	4
B-14585	Rear lamp wire clip on frame (was A-14585)	1928-31	.....	03	5
A-14587-R	Rear lamp wire grommet—Fordor	1928-29	.....	02	1
A-14588	Rear lamp wire clip on body—285A, 290A	1931	.....	04	1
A-22613-S1	Screw (clip to body)	1931	$0 40	01	1
A-14589	Windshield wiper wire finish strip grommet	1928-31	.....	02	1
A-14590	Windshield wiper wire grommet on belt rail	1928-31	.....	04	1
A-14591-A	Wire grommet—35B, 40B, 76B, 180A	1928-30	.....	02	4
A-14592	Rear lamp wire clip on body—200A, 202A, 204A, 206A, 208A	1929-31	.....	02	1
A-14588	Rear lamp wire clip on roof rail—rear—225-A	1931	.....	04	1
A-14592	Rear lamp wire clip on roof rail—side—225-A	1931	.....	02	1
A-22647-S2	Screw (rear lamp wire clip) 225A	1931	50	01	1
A-20812-S4	Bolt (rear lamp stop light and license bracket support) 195A	1931	.....	02	2
A-14593-AR	Wire grommet support	1928-30	.....	03	4
A-14593-B	Wire grommet support	1930-31	.....	03	1
A-14595-AR	Rear lamp wire clip-on support	1928-29	.....	03	2
A-14595-B	Rear lamp and stop light wire clip-on support	1930-31	.....	03	2
A-14596-R	Windshield wiper wire clip	1928-30	.....	04	1
A-14597	Rear lamp wire conduit	1929-31	.....	05	1
B-14598	Headlamp wire clip (on frame) (was A-14598)	1929-31	.....	04	1
A-14601-R	Headlamp plug spacer washer	1929-30	.....	01	2

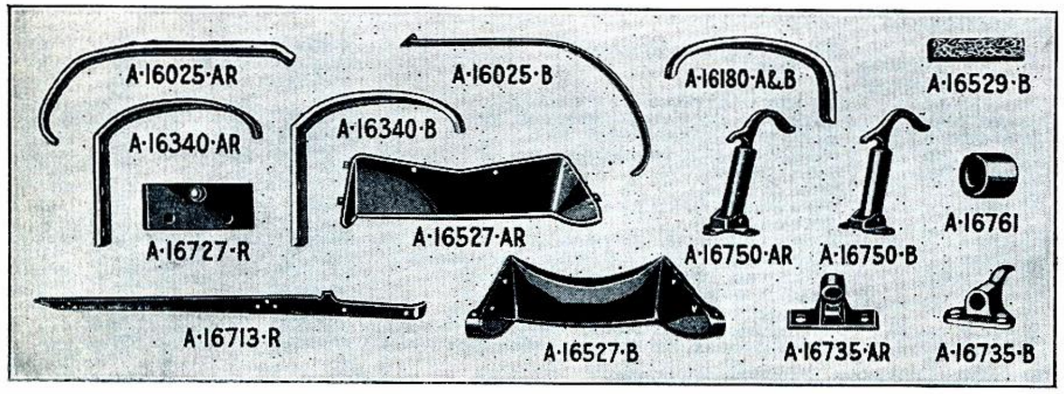

FENDERS, RUNNING BOARDS AND SHIELDS

FRONT FENDERS

Part No.	Name of Part	Year	LIST PRICE Lots of 100 per lot	LIST PRICE Each	No. Req. per Car
A-16005-AR	Front fender—R. H.	1928-29	.....	7 35	1
A-16005-B	Front fender—R. H.	1930	.....	7 50	1
†A-16005-C	Front fender—R. H.	1930-31	.....	7 35	1
A-16006-AR	Front fender—L. H.	1928-29	.....	7 35	1
A-16006-B	Front fender—L. H.	1930	.....	7 50	1
‡A-16006-C	Front fender—L. H.	1930-31	.....	7 35	1
A-16025-AR	Front fender bracket	1928-30	.....	1 15	2
A-16025-B	Front fender bracket	1930-31	.....	60	2
A-16029	Front fender shield—R. H.	1930	.....	1 50	1
A-16030	Front fender shield—L. H.	1930	.....	1 50	1
A-16035-AR	Front fender with well—R. H.	1928-30	.....	8 50	1
A-16035-B	Front fender—R. H. (with well)	1930	.....	8 50	1
#A-16035-C	Front fender—R. H. (with well)	1930-31	.....	8 50	1
A-16036-AR	Front fender with well—L. H.	1928-30	.....	8 50	1
A-16036-B	Front fender—L. H. (with well)	1930	.....	8 50	1
§A-16036-C	Front fender—L. H. (with well)	1930-31	.....	8 50	1
A-16050-R	Front fender shield—R. H.	1930	.....	1 60	1
A-16051-R	Front fender shield—L. H.	1930	.....	1 60	1
A-16070	Front fender to hood clip support bracket anti-squeak	1930-31	.....	01	2

*When used to replace longer plug also use A-14601-R.
†When replacing previous type also use A-16029. #When used to replace previous type also use A-16050
‡When replacing previous type also use A-16030. §When used to replace previous type also use A-16051

Part No.	Name of Part	Year	LIST PRICE Lots of 100 per lot	LIST PRICE Each	No. Req. per Car
A-16071-AR	Front fender to running board shield anti-squeak	1928-30	.....	$0 12	2
A-16071-B	Front fender to running board shield anti-squeak assembly	1930-31	.....	06	2
A-16071-C	Front fender shield to running board anti-squeak	1930-31	.....	10	2

FRONT FENDER BOLTS

Part No.	Name of Part	Year	LIST PRICE Lots of 100 per lot	LIST PRICE Each	No. Req. per Car
A-20556-S1	1/4"—20 x 3/4" carriage bolt		.....	01	.....
A-20560-S4	1/4"—20 x 7/8" oval hd. mach. screw		.....	01	.....
A-20566-S8	1/4"—20 x 1" hex. hd. bolt		.....	01	.....
A-20594-S1	1/4"—20 x 7/8" carriage bolt		$0 60	01	.....
A-20606-S3	1/4"—20 x 9/16" carriage bolt		50	01	.....
A-20608-S1R	1/4"—20 x 1 1/8" carriage bolt		.....	02	.....
A-20711-S1	5/16"—18 x 3/4" carriage bolt		.....	01	.....
A-20718-S2	5/16"—18 x 3/4" hex. hd. mach. bolt		.....	01	.....
A-20932-S1	3/8"—24 x 15/16" hex. hd. bolt		.....	02	.....
A-20953	3/8"—24 x 1 7/32" hex. hd. bolt—with cotter hole		.....	03	.....
A-20971-S1	3/8"—24 x 1 5/32" hex. hd. bolt		.....	02	.....

FRONT FENDER NUTS

Part No.	Name of Part	Year	LIST PRICE Lots of 100 per lot	LIST PRICE Each	No. Req. per Car
A-21668-S2	1/4"—20 (3/16" x 1/2") hex. nut		50	01	.....
A-21707-S2	5/16"—18 (1/16" x 1/2") hex. nut		65	01	.....
A-21741-S8	3/8"—24 (21/64" x 9/16") hex. nut		60	01	.....
A-21845	1/2"—20 (7/16" x 3/4") hex. nut		1 25	02	.....

FRONT FENDER WASHERS

Part No.	Name of Part	Year	LIST PRICE Lots of 100 per lot	LIST PRICE Each	No. Req. per Car
A-22151	1/4" (1/16" x 11/64") lock washer		25	05 dz.	.....
A-22154-S8	1/4" (1/16" x 3/4") plain washer		50	01	.....
A-22166-S8	1/4" (1/16" x 3/4") plain washer		40	01	.....
A-22217-S2	5/16" (1/16" x 21/64") lock washer		25	01	.....
A-22223-S2	5/16" (1/16" x 3/4") plain washer		30	01	.....
A-22245-S1	3/8" (3/32" x 11/32") lock washer		25	01	.....
A-22330	1/2" (1/8" x 7/8") lock washer		50	01	.....

REAR FENDERS

Part No.	Name of Part	Year	LIST PRICE Lots of 100 per lot	LIST PRICE Each	No. Req. per Car
*A-16160-AR	Rear fender assembly—R. H.	1928-30	.....	4 50	1
A-16160-B	Rear fender assembly—R. H.—40B, 45B, 50B, 68B, 78A	1930-31	.....	4 50	1
*A-16161-AR	Rear fender assembly—L. H.	1928-30	.....	4 50	1
**A-16161-BR	Rear fender assy.—L. H. with holes for lamp	1929-30	.....	4 50	1
A-16161-D	Rear fender assy.—L. H.—40B, 45B, 50B, 68B, 78A	1930-31	.....	4 50	1
A-16168	Rear fender assembly—R. H.—78B	1931	.....	4 00	1
A-16169	Rear fender assembly—L. H.—78B	1931	.....	4 00	1
*A-16180-AR	Rear fender bracket	1928-30	.....	25	1
A-16180-B	Rear fender bracket—40A, 40B, 45A, 45B, 50B, 68A, 68B, 68C, 78A	1929-31	.....	25	2
A-16182	Rear fender bracket—78B	1931	.....	15	.....
A-16210	Rear fender—R. H.—180A	1930-31	.....	4 75	1
A-16211	Rear fender—L. H.—180A	1930-31	.....	4 75	1
A-16240	Rear fender bracket—180A	1930-31	.....	25	2
†A-16310-AR	Rear fender assembly—R. H.	1928-30	.....	4 75	1
A-16310-B	Rear fender assembly—R. H.—35B, 55B, 79B, 130B, 140B, 150B, 155C, 155D, 160A, 160B, 160C, 165C, 165D, 170B, 190A, 225A, 255A, 295A, 400A	1930-31	.....	4 75	1
†A-16311-AR	Rear fender assembly—L. H.	1928-30	.....	4 75	1
††A-16311-B	Rear fender assy.—L. H.—with holes for lamp	1929-30	.....	4 75	1
A-16311-C	Rear fender assy.—L. H.—without holes for lamps—79B, 130B, 150B, 255A, 225A, 295A	1930-31	.....	4 75	1
A-16311-D	Rear fender assy.—L. H.—with holes for lamp—35B, 55B, 140B, 155C, 155D, 160A, 160B, 160C, 165C, 165D, 170B, 190A, 400A	1930-31	.....	4 75	1
§A-16340-AR	Rear fender bracket	1928-29	.....	25	1
A-16340-B	Rear fender bracket—35B, 55B, 79B, 130B, 140B, 150B, 155C, 155D, 160A, 160B, 160C, 165C, 165D, 170B, 190A, 225A, 255A, 295A, 400A	1930-31	.....	25	2
A-16343	Rear fender to body anti-squeak—150B	1930-31	.....	20	2
A-16344-AR	Rear fender to body anti-squeak Pick-up	1928-29	.....	20	2
A-16344-B	Rear fender to body anti-squeak—78A	1930-31	.....	20	2
A-16344-C	Rear fender to body anti-squeak—78B	1931	.....	20	.....
A-16346	Rear fender to body anti-squeak A Panel	1928-31	.....	20	2
A-16347-AR	Rear fender to body anti-squeak—Fordor, Tudor, Phaeton	1928-30	.....	20	2
A-16347-B	Rear fender to body anti-squeak—55B, 35B, 130B	1930-31	.....	20	2
A-16348-AR	Rear fender to body anti-squeak—Roadster, Coupe, Sport Coupe	1928-30	.....	20	2
A-16348-B	Rear fender to body anti-squeak—68B, 45B, 50B, 40B	1930-31	.....	20	2
‡A-16350-R	Rear fender assembly—R. H.	1928-29	.....	4 25	2
‡A-16351-AR	Rear fender assembly—L. H.	1928-29	.....	4 25	1
‡A-16351-B	Rear fender assy.—L. H.—with holes for lamp	1929	.....	4 25	1

*40A, 45A, 50A, 54A, 49A, 68A, 78A. †35A, 55A, 79A, 130A, 135A, 140A, 150A, 155A, 155B.
**40A, 45A, 50A, 54A, 49A, 68A. ††35A, 55A, 130A, 135A, 140A, 155A, 155B.
§35A, 55A, 60A, 60B, 60C, 79A, 135A, 140A, 150A, 155A, 155B, 165A, 165B, 170A. ‡60A, 60B, 60C, obsolete—use A-16310-AR—11-AR—A-16310-B—11-B.

CUT ON DOTTED LINE

Part No.	Name of Part	Year	LIST PRICE Lots of 100 per lot	Each	No. Req. per Car
A-16369	Rear fender to body anti-squeak—190A	1931	.....	$0 25	2
A-16370	Rear fender to body anti-squeak—Fordor, Town Car	1928-30	.....	25	2
A-16372-AR	Rear fender to body anti-squeak—155A, 155B, 160A, 165B, 170A	1929-30	.....	25	2
A-16372-B	Rear fender to body anti-squeak—155D, 165D, 170B	1930-31	.....	25	2
A-16372-C	Rear fender to body anti-squeak—155C, 165C, 195A, 197A, 285A	1930-31	.....	25	2
A-16373-R	Rear fender to body anti-squeak—Taxi	1929	.....	20	2
A-16374	Rear fender to body anti-squeak—180A	1930-31	.....	25	2
REAR FENDER BOLTS AND SCREWS					
A-20594-S1	1/4"—20 x 7/8" carriage bolt		$0 60	01	
A-20596-S7	1/4"—20 x 3/4" hex. head bolt		.....	01	
A-20705-S1	5/16"—24 x 11/16" hex. head bolt		75	01	
A-20711-S1	5/16"—18 x 3/4" carriage bolt		.....	01	
A-20718-S2	5/16"—18 x 3/4" round head bolt		.....	01	
A-20719-S1	5/16"—18 x 9/16" carriage bolt		1 00	02	
A-20753-S1	5/16"—24 x 1" hex. head bolt		.....	02	
A-20763-S1	5/16"—24 x 25/32" hex. head bolt		.....	01	
A-20774	5/16"—24 x 4 5/8" hex. head bolt		.....	04	
A-20783	5/16"—18 x 5/8" carriage bolt		.....	01	
A-22675	No. 12 x 1 1/4" flat head wood screw		50	01	
REAR FENDER NUTS					
A-21668-S2	1/4"—20 (3/16" x 1/2") hex. nut		50	01	
A-21702-S2	5/16"—24 (11/64" x 1/2") hex. nut		50	01	
A-21707-S2	5/16"—18 (1/4" x 1/2") hex. nut		65	01	
A-21793-S1	7/16"—20 (3/8" x 11/16") hex. nut		.....	01	
REAR FENDER WASHERS					
A-22151	1/4" (1/16" x 35/64") lock washer		25	05 dz.	
A-22154-S8	1/4" (1/16" x 3/4") plain washer		50	01	
A-22166-S8	1/4" (1/16" x 3/4") plain washer		40	01	
A-22217-S2	5/16" (1/16" x 37/64") lock washer		25	01	
A-22223-S2	5/16" (1/16" x 3/4") plain washer		30	01	
RUNNING BOARDS AND SHIELDS					
A-16450-BR	Running board and shield assembly—R. H.	1930	.....	6 50	1
A-16450-C	Running board assembly—R. H.	1930-31	.....	2 20	1
A-16451-AR	Running board assembly	1928-30	.....	2 75	2
A-16451-BR	Running board and shield assembly—L. H.	1930	.....	6 50	1
A-16451-C	Running board assembly—L. H.	1930-31	.....	2 20	1
A-16459-R	Running board assembly—Commercial Chassis except 130A and 150A	1928-30	.....	1 85	2
A-16462-C	Running board moulding	1930-31	.....	20	2
A-16468	Running board assembly—R. H.—79B, 76B, 82B	1930-31	.....	2 00	1
A-16469	Running board assembly—L. H.—79B, 76B, 82B	1930-31	.....	2 00	1
A-16495	Running board to shield anti-squeak	1930-31	.....	03 yd.	2
A-16527-AR	Front splash shield assembly	1928-30	.....	1 95	1
A-20600-S6	Bolt (shield to frame)	1928-31	.....	03	4
A-16527-B	Front splash shield assembly	1930-31	.....	1 70	1
A-20646-S1	Screw (shield to bumper arm stud)	1930-31	.....	01	4
A-22150-S1	Washer	1930-31	.....	03 dz.	4
A-16529-AR	Front splash shield pad	1928-30	.....	02	2
A-16529-B	Front splash shield pad	1930-31	.....	01	1
A-22985-S4	Rivet	1930	25	05 dz.	4
A-22991-S4	Rivet	1930-31	25	05 dz.	2
A-16532-R	Running board shield—R. H.—A Chassis except 130B, 150B, 79B, 76B, 82B, 255A	1930	.....	2 50	1
A-16533-R	Running board shield—L. H.—A Chassis except 130B, 150B, 79B, 76B, 82B, 255A	1930	.....	2 50	1
A-16535-AR	Running board shield—R. H.	1928-30	.....	2 50	1
A-16535-C	Running board shield—R. H.	1930-31	.....	2 75	2
A-16536-AR	Running board shield—L. H.	1928-30	.....	2 50	1
A-16536-C	Running board shield—L. H.	1930-31	.....	2 75	1
*A-16538-B	Running board shield—R. H.	1930-31	.....	2 60	1
A-16539-AR	Running board shield—L. H.—A Commercial except 135A, 150A	1928-29	.....	2 75	1
*A-16539-B	Running board shield—L. H.	1930-31	.....	2 60	1
A-16540-AR	Running board shield to frame anti-squeak—front	1928-30	.....	10	2
A-16540-B	Front fender to frame anti-squeak	1930-31	.....	10	2
A-16541	Running board shield to frame anti-squeak—rear	1928-31	.....	10	2
A-16542	Front body bracket to running board shield anti-squeak	1928-31	.....	01	1
A-16543	Running board shield to rear body bracket anti-squeak—190A	1930-31	.....	01	2
RUNNING BOARD BOLTS					
A-20412-S2	No. 12—24 x 13/32" special oval head bolt		1 00	02	
A-20606-S3	1/4"—20 x 9/16" special head carriage bolt		50	01	

*With hole for side wheel carrier.

Part No.	Name of Part	Year	LIST PRICE Lots of 100 per lot	Each	No. Req. per Car
A-14320-R	Dome lamp switch to light wire assembly—Fordor	1928-29	.....	$0 30	1
A-14321-R	Dome lamp switch to terminal box wire assembly—Fordor	1928-29	.....	12	1
A-14322-R	Dome lamp switch to ground wire assembly—Fordor	1928-29	.....	25	1
A-14327-R	Dome lamp switch to terminal box wire assembly—De Luxe Delivery	1928-31	.....	10	1
A-14328	Windshield wiper drop header wire assembly	1929-30	.....	05	1
A-14331	Dome lamp to ground wire assembly	1929-31	.....	15	1
A-14333	Body header to windshield wiper wire assembly	1929-30	.....	05	1
A-14336	Body header to dome lamp switch wire assembly	1929-31	.....	10	1
A-14340-R	Dome lamp to ground wire assembly	1929-31	.....	15	1
A-14341	Cowl lamp socket wire assembly	1930-31	.....	10	2
A-14342	Terminal box to dome light wire assembly—45B (DL)	1930-31	.....	30	1
A-14349	Rear lamp ground wire assembly—225A	1931	.....	15	1
A-14401-B	Wiring assembly on cowl	1928-31	.....	25	1
A-14403-BR	Head lamp wiring assembly (1 bulb)	1928-29	.....	90	1
A-14403-C	Head lamp wiring assembly (2 bulb)	1929-31	.....	1 00	2
A-14403-D	Head lamp wiring assembly (1 bulb)	1929-31	.....	90	2
*A-14405-CR	Rear lamp wiring assembly	1928-29	.....	70	2
‡A-14405-D	Rear lamp wiring assembly	1929-31	.....	70	1
A-14406-A	Cutout to terminal block wire and conduit assy.	1928-31	.....	25	1
A-14423-A	Rear lamp extension wire assembly—8' long	1928-29	.....	20	1
BB-14423	Rear lamp extension wire assembly—43 1/2' long. (was A-14423-B)	1929	.....	25	1
A-14423-C	Rear lamp wire extension assembly—51 1/2' long	1931	.....	85	1
A-14487	Rear lamp extension wire connector and sleeve assembly—225A	1931	.....	03	2
A-14423-D	Rear lamp extension wire assembly—225A	1931	.....	40	
A-14426	Cowl lamp wiring assembly—45B (DL), 68A, 68B, 140A, 155A, 155B, 155C, 155D, 170B (DL), 180A	1929-31	.....	40	1
†A-14428	Cowl lamp wiring assembly	1928-31	.....	25	1
A-14429	Cowl lamp switch wiring assembly	1928-31	.....	25	1
A-14430	Fender lamp switch wiring assembly	1929-31	.....	30	1
TERMINALS					
A-14451	Battery negative terminal	1928-31	.....	12	1
A-20729-S16	Bolt	1928-31	$0 50	01	2
A-21707-S16	Nut	1928-31	.....	01	2
A-14452-AR	Battery to switch cable terminal	1928	.....	04	1
A-14452-B	Battery to switch cable terminal	1928-31	.....	04	1
A-14459-AR	Head lamp plug terminal	1928-29	.....	06	4
A-14459-BR	Head lamp plug terminal	1929	.....	01	2
A-14461-B	Wire terminal	1930-31	.....	01	2
**A-14461-C	Wire terminal	1928-31	.....	01	2
B-14462	Wire terminal (was A-14462)	1928-31	.....	01	1
A-14463	Wire terminal	1931	.....	01	
B-14464	Wire terminal (was A-14464)	1928-31	.....	01	1
A-14465	Horn and switch wire terminal (on cutout)	1928-31	.....	01	1
A-14471-R	Windshield wiper connector assembly	1928-30	.....	05	1
A-14474	Lighting switch wire terminal—single	1928-31	.....	01	2
A-14475	Lighting switch wire terminal—double	1928-31	.....	01	3
A-14476	Windshield wiper terminal extension—Fordor	1928-31	.....	03	1
B-14487	Wire connector and sleeve assembly (was A-14487)	1929-31	.....	03	2
WIRING CLAMPS, SUPPORTS, ETC.					
A-14550	Battery to switch cable support assembly	1928-31	.....	10	1
AF-14556	Fender lamp wire clip	1928-29	.....	04	2
A-14560-A	Terminal box	1928-31	.....	25	1
A-14561-A	Terminal box cover	1928-31	.....	10	1
A-21569	Nut	1928-31	.....	02	2
A-20280-S2	Screw (box to dash)	1928-31	.....	01	4
A-22088	Washer	1928-31	30	01	4
A-14564	Wire connector assembly	1929-31	.....	12	1
B-14565	Rear lamp wire clip (on fender bracket) (was A-14565)	1929-31	.....	02	1
B-14567-A	Horn wire conduit grommet (was A-14567-A)	1928-31	.....	02	1
B-14567-A	Head lamp wire conduit grommet (was A-14567-A)	1928	.....	02	2
B-14567-B	Head lamp wire conduit grommet (2 bulb lamp) (was A-14567-B)	1929-31	.....	02	2
A-14567-C	Head lamp wire conduit grommet (1 bulb lamp)	1929	.....	02	2
B-14577-A	Terminal box to generator conduit clip (was A-14577-A)	1928-31	.....	04	2
A-20427-S2	Bolt (clip to dash)	1928-31	.....	01	1
A-22139-S4	Washer	1928-31	20	05 dz.	1
A-20534-S2	Bolt (clip to inlet connection)	1928-31	.....	01	1
A-22150	Washer	1928-31	25	01	1
B-14577-B	Speedometer cable to dash clip for 13/64" casing (was A-14577-B)	1929-31	.....	04	1
A-14578-AR	Head lamp wire conduit assembly	1928-29	.....	30	2
A-14578-B	Head lamp wire conduit assembly	1928-31	.....	30	2

*When used to replace previous type also use BB-14423. ‡Use with A-13480-B.
**When used to replace previous type on head lamp wire also use B-14584.
†All cars not having cowl lamps as standard equipment.

"A" FLEA MARKET . . . *CLASSIFIED ADS*

PROFESSIONAL PARTS SUPPLIERS

Cylinder Explosion Whistles—Ideally suited to the Model "A" engine. Authentic duplicate of the originals made in the "good old days," and so highly prized now. Just pull the string and the whistle shrieks each time the cylinder fires. Easily installed and no waiting 'til the next tour to use it. The whole family gets a kick out of it. Whistle $11.75, adaptor for Model "A" engine, $2.00. Postpaid except C.O.D. Satisfaction guaranteed. Stanley Lucas, Box 174-R, Culver City, Calif.

Highest Quality Performance Guaranteed! Your Model "A" parts Headquarters. 65 page Catalog, 50c. Antique Auto Parts, Inc. 9113 East Garvey Ave., Rosemead 3, Calif., ATlantic 8-2121, CUmberland 3-7468, Code 213.

FOR SALE

New original: AA left double steering arm, $10.00, same for right hand drive "A", $10.00, A-3130 for $5.95, curved tailite glass now $.75. Good used: '30-'31 cowlites w/glass (no arms) $5.00 each, late '31 Zenith carburetor, $8.50, filter for same $5.00. All F.O.B.
Ed Wright, 16 Carnavon, Springfield, Mass.

1929 Bumperettes, $8.00, rumble seat step plates for bumperette, $2.00, very nice set of '30-'31 front fenders, left welled, right plain. Make offer. Add postage.
Gerald Dickman, 6545 Darlington Road, Pittsburgh, Penna. 15217.

The following '29-'31 "A" Parts: Pair '30 front fenders with wells, '31 right splash shield, '31 front splash shield, 2-'30 left front plain fenders, 6-'29 right rear fenders for Station Wagon and Touring, 3-'29 left rear fenders (no tail light holes), 3-'29 headlight crossbars, 2-'28 right side splash shields - early type, 8 pair '30 type front shield extensions. One price for entire lot - $1024.00.
Chester Nadasky, 1830 W. 34th Pl., Chicago 8, Ill.

1930 "A" Coupe - needs front bumper, horn, upholstery, and one door to be complete. Painted Kewanee & Elk Point Green. Many new parts including 4 new tires. Motor rebuilt. Some chrome plating done. Driven daily, $500.00 firm.
Joe Stanbro, 203A Choctaw, Clinton Sherman A.F.B., Oklahoma.

1930 "A" Standard Roadster with left sidemount. Top complete, but fabric leaky. Unrestored. Driven daily, $395.00.
Paul Wren, Valley Hill Drive, Holden, Mass. 01520. Phone 829-4521.

Phillips Automatic Spark Controls. Make your "A" run as smooth as an eight, $9.00 each. (New-old stock). Also have other new "A" parts.
Furman M. Teston, Jr., 4707 Oakview Dr., Savannah, Ga.

1931 "A" Pickup in good running condition, $175.00. or best offer. Some body work done.
Colin B. McAuley, 84 Neal Gate St., Greenbush, Mass.

1931 Deluxe Roadster - restored. Twin side mounts and rack, $1600.00. 1931 Roadster unrestored, excellent, $800.00. 1931 slant windshield Cabriolet, 85% restored - side mount and luggage rack, $1400.00. 1930 Sport Coupe restored, $1500.00. Work nights.
Phone Francis Balser, 214 Cleveland, Alexandria, Indiana.

1931 Tudor Body with seats, $50.00.
Roland Becker, 626 Vroman St., Green Bay, Wisconsin, 54303.

1935 Model 48 Ford V8 Touring Car - Battleship Grey (of course!) 90,000 miles, history known, new tires, top, battery and chrome. This is a grand car, but I have too many around the house. $500.00 if you come and get it.
T. J. M. Dobson, Garden Cottage, King Henry's Road, Lewes, Sussex, England.

New "A" Parts: Horn bug screens, $.75. Dual wheel and tire extension lugs, set of 3 (carry an extra spare to meets and tours), $7.50. Original spring type front motor mounts, per set, $1.50.
Clifford E. Moebius, 84 Stanley Ave., Nutley 10, N. J.

1931 Deluxe Roadster complete with upholstery, roof, weld fender, and trunk rack. 80% restored, will sacrifice for $1200.00. Drive it away.
Wayne Karn, 4 South Fork Drive, Pittsburgh, Pa. 15229. Phone 931-3392.

1930 Chevie Motor, Trans. Diff. Six wheels and 17" tires. 19" tires and wheels. CR. 8-0051.
Lloyd Van Meter, 24715 Powers, Dearborn Heights,

WANTED

Aluminum door sill plates; complete set or individual pieces, garnish moulding for windows; inside window frames for back and side windows in back compartment; female catch, rear seat back; dome light switch and backing plate; arm rests; bucket seat.
Marine L. Wolf, 653 N. Greenwich Rd., Wichita, Kansas.

TRADE

1930 "A" closed cab from Pickup in very good condition, for cab from Roadster Pickup, same year and condition.
Colin B. McAuley, 84 Neal Gate St., Greenbush, Mass.

New original Ford old stock 2-B2011 Plate Assy. (Front Brake Housing) Pass., Comm. '32-'34, for new original Ford old stock, 2-A2011 Plate Assy. (Front Brake Housing), Pass. Comm. '28-'31 or trucks '28-'29.
Bill Fox, 15716 So. Ingleside, Dolton, Ill. 60419.

Mustang for 1965

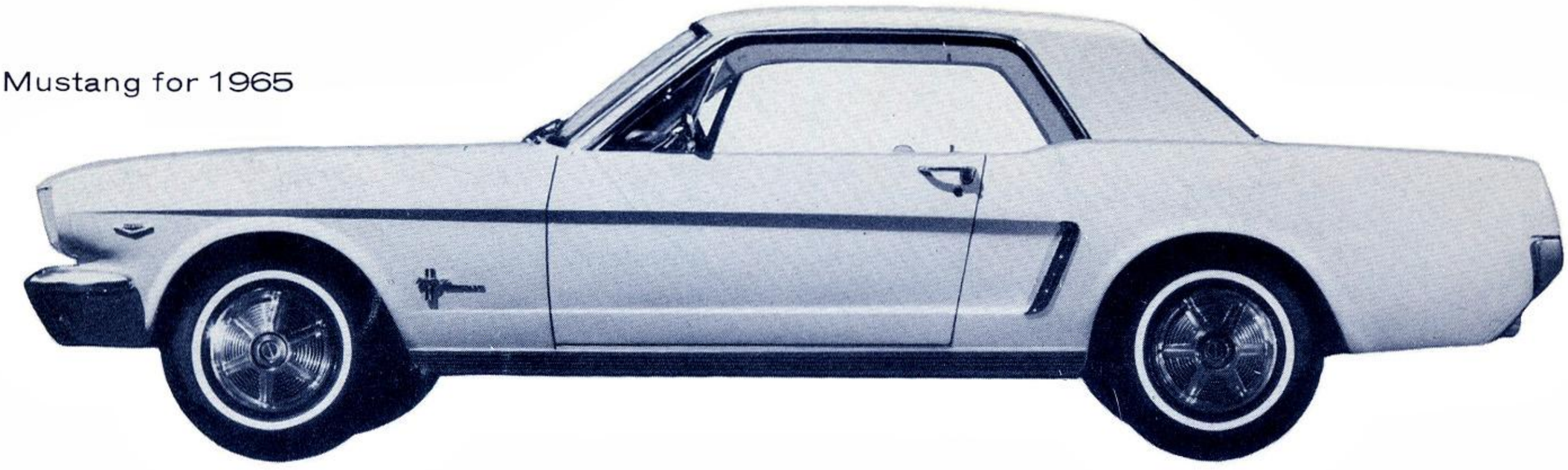

We're still making collector's items

(IT'S A FORD MOTOR COMPANY HABIT)

Model A vintage of 1929

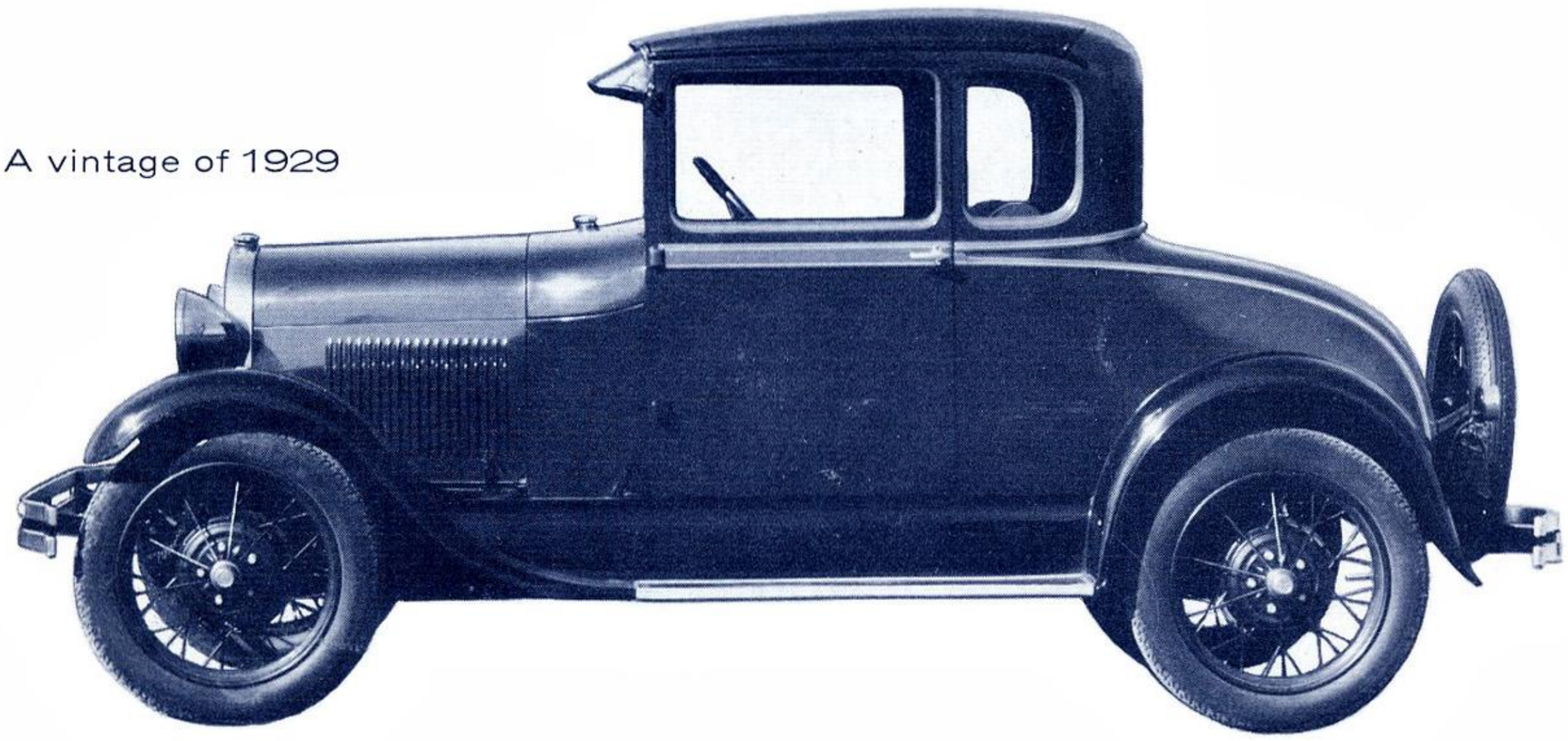

Some 36 years separate these famous products. But we think it safe to say that they call up very similar emotions in the heart of the true car lover.

Both represent an excellence of engineering, styling and value that puts them well ahead of their contemporaries. Both were quick to win public recognition for their daring and difference. These are the qualities that assure a place for so many Ford Motor Company cars in any automobile Hall of Fame. To name a few: the indefatigable Model T, the ubiquitous Model A, and the zesty Ford V-8's of the late 1930's. And of course, the unprecedented Lincoln Continentals—Mark I and II and the most recent editions—to say nothing of the Thunderbirds of today and yesterday.

Yes, we are still building collector's items. Visit your Ford, Mercury and Lincoln Continental dealers' soon—you'll want to add to your collection!

FORD-BUILT MEANS BETTER BUILT

Ford

MOTOR COMPANY

MUSTANG • FALCON • FAIRLANE • FORD • THUNDERBIRD
COMET • MERCURY • LINCOLN CONTINENTAL

LITHO IN U.S.A.