MARC NEWS

NOVEMBER 1961

Perky Sisters Drive Perky Old Cars

MARC NEWS

P. O. Box 615, Zanesville, Ohio

The Monthly Publication

of the Model "A" Restorers Club

Founder & Managing Editor — W. E. Hall

Printed by Franklin Printing Co.

NEITHER MARC NEWS NOR MODEL "A" RESTORERS CLUB CAN ASSUME RESPONSIBILITY FOR ERRORS IN COPY OR INFORMATION, OR FOR CLAIMS ARISING THEREFROM. EVERY EFFORT IS MADE TO ELIMINATE MISTAKES IN PUBLICATION OR PRINTING.
MARC NEWS DOES NOT ASSUME ANY LIABILITY OR RESPONSIBILITY FOR PRODUCTS OR SERVICES LISTED HEREIN, OR RESULTANT TRANSACTIONS.

ADVERTISING RATES

Below you will find a scale of advertising rates for advertisements placed in **MARC NEWS.**

All ads must be received on or before the 10th day of the month for which they are to be run otherwise they will be held for the following issue.

	NUMBER OF TIMES ENTERED			
	1	3	6	12
Full Page	$20.00	$18.80	$17.20	$15.20
Half Page	$12.00	$11.28	$10.32	$ 9.12

Box Ads: 50 words or less.....$5.00
Additonal units at 50 words or less.....$2.50

NOTICE:

All classifieds for MARC News will be mailed to the following address:

William E. Hall
Box 615
Zanesville, Ohio

ALL ADS MUST be received on or before the 1st. of each month to be considered for entry.

First of each month is deadline for material.

NOTICE — ALL MEMBERS ARE ENTITLED TO A 40 WORD AD FREE EACH MONTH.
Additional words or any parts thereof up to 40 words will be $1.00.

NOTICE TO ALL REGION CORRESPONDENTS:
With the additional able assistance of Harold Angel, as News Co-ordinator, we would like to request that each and every region kindly forward to Harold ON OR BEFORE the 1st. of each month all regional activities and news-worthy notes.

We greatly appreciate receiving the many various regional news bulletins, however we ask that regional correspondents please keep us informed of important local meet dates at least 60 days prior to the meet. This will assist us in giving all members and regions due notice of coming events. Many thanks for your past faithful assistance and cooperation.

Polomar
Henry Jenkins
467 E. Vale View Dr.
Vista, Calif.

Niagara Falls
Robert Redmore
901 Mohawk St.
Lewiston, N.Y.

Falls City
Robert E. Johnson
3821 Peachtree St.
Louisville 15, Ky.

OFFICERS

President — Kenneth B. Brewer
2643 E. Streetsboro Rd.
Hudson, Ohio

Vice President — J. L. Helms, Jr.
3912 Plaza, Charlotte 5, N.C.

Secretary — Jon D. Miller
526 W. Sycamore, Columbus Grove, Ohio

Treasurer — Jack Sandifar
540 Oak St., Winchester, Indiana

COMMITTEES

Technical Chairman — Glen Crawford
1424 S. 4th St.
Richmond, Indiana

Membership Chairman — Stewart A. Murray
12069 Ashton Ave., Detroit 28, Michigan

Regional Organizer — John Kaspar
5517 No. McVickers Ave., Chicago, Ill.

Activities — David Morton
382 Sheridan, Lexington, Ky.

PUBLICATIONS

Editor & Classified Ads — William E. Hall
216 Military Road, Zanesville, Ohio

News Co-ordinator — Harold Angel
2754 Fairmont, Dayton 19, Ohio

Fashions — Mrs. Virginia Richardson
3711 Poppy St., Long Beach 5, Calif.

REGIONAL DIRECTORY

Alabama
Earl T. Battle
1708 7th Avenue
West Birmingham 8,
Alabama

Florida
David L. Boyd
820 So. Dakota Ave.
Tampa, Fla.

Illinois
R. J. Gerrits
5719 N. Milwaukee Ave.
Chicago, Ill.

Michigan
Richard D. Byron
20886 Thorofare
Grosse Ile, Mich.

Southwest (Ariz.)
Bert Haynes
3402 W. Turney
Phoenix, Ariz.

West Virginia
Jack Rorrer
P.O. Box 63
Pratt, W. Va.

San Gabriel
Joseph M. Bridwell
6825 N. Muscatel
San Gabriel, Calif.

Smoky Mountain
Clay A. Butcher
911 Radford Place
Knoxville, Tenn.

Tri-State
S. Ohio, S.E. Ind., N. Ky.
John C. Jackson
9726 Delray Drive
Cincinnati 42, Ohio

Wisconsin
Stanley Walz
5706 Russett Rd.
Madison 5, Wisc.

San Diego
Jack R. Zollars
4115 Spillman Dr.
San Diego, Calif.

Chesapeake Bay
Harry Metcalf
946 Skyline Dr.
Lancaster, Penna.

Georgia
Howard Paris
Box 576
East Point, Ga.

Ind.-Ohio
Herbert Walker
Box 249A Rt. 1
Centerville, Ind.

Missouri Valley
Waldo E. Nutter
301 S. Woodlawn
Kirkwood, Mo.

Neb. — Iowa
Raymond J. Kriskey
1502 Second Avenue
Plattsmouth, Nebraska

North Carolina
Leon L. Rice, Jr.
2550 Warwick Road
Winston-Salem, N.C.

Harbor Area
Robert Moser
21319 Evalyn
Torrance, Cal.

East Tenn.
N. F. Carrier
Box 23
Bluff City, Tenn.

3 River
Norbert C. Hodgson
100 Helen St.
Library, Penna.

Kentucky
David L. Morton
382 Sheridan
Lexington, Ky.

Hudson Valley
Edward Borrell, Director
RD 3 Old Oregon Rd.
Peekskill, N.Y.

Upstate N.Y.
Vinson J. Finch
1583 Central Ave.
Albany, N.Y.

Iowa
Larry Smith
713 N. Market
Oskaloosa, Iowa

COVER

This month's cover picture was taken by Floyd Jillson, photographer, for "Atlanta Journal and Constitution Magazine". The sisters are Mrs. B. G. Magee, 83, with her 1930 Chevrolet and Mrs. E. C. Guerry, 72 with her 1929 Ford. They both bought their cars new and wouldn't sell them no matter what the price. Mrs. Guerry lives in Americus, Georgia and Mrs. Magee in Brooklyn, Georgia.

Calendar of Events

SWAP MEET

Parkersburg, West Virginia in the City Park Pavilion. Rain or Shine. Inside. November 18 at 10:00 A. M. Sponsored by the Pioneer Antique Auto Club of The Mid-Ohio Valley. For more information write to George Pritchett, Jr., Tunnel Road, Marietta, Ohio.

FIRST ANNUAL STATE-WIDE MODEL A FORD JUDGING MEET

Fallbrook, San Diego County, California on November 5, 1961.

This will be the big California roundup that various clubs in the state have talked about having for several years. Here is the answer to those dreams--the meet is now an actuality.

The location is terrific, and the climate is such that the meet is bound to be a success. We have been given the use of a large grass-covered field (about three times bigger than a football gridiron) and will be equipped be handle from 300 to 500 cars. Also, we will have use of a school gymnasium which will seat more than 800 persons, which will be the site of a 1928-31 fashion show, to be presented by the San Diego Region MARC.

There will be between 30 and 40 trophies given away to Model A Fords in all categories. Antique, classic and special interest automobiles will be invited to augment the public display.

Entry blanks must be filled out by all those intending to enter Model A Ford cars, which are being charged a fee of $3.00 each to defray costs. All cars to be shown OTHER THAN Model A Fords will not be charged a fee.

Although the deadline for entries was October 1, late entries are being accepted.

Bob White, Secretary and Chairman of the Meet Committee, 430 N. Main, Fallbrook, California.

FOURTH ANNUAL ANTIQUE CAR MEET

November 25/26, 1961. There will be special awards and events for Model A's. Registration of $2.00 will include a plaque and complimentary lunch for two. C. C. Baldwin, Chairman, Ormond Beach, Florida.

REGIONAL NEWS

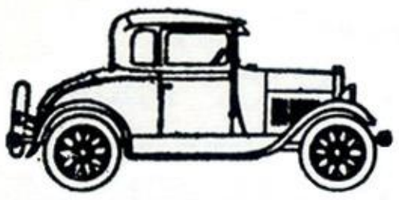

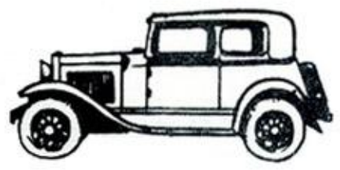

GEORGIA

Our Annual Judging Meet was held at Perkerson Park. The twenty-three cars registered were well distributed among the various body styles: 5 Tudors, 3 Fordors, 3 Sport Coupes, 3 Pickups, 2 Fordor Phaetons, 2 Coupes, 4 Roadsters and 1 Victoria.

Joe Montabana, Earl Battle, Jack Keller and Millard Young came over from the Alabama Region to give us impartial judging and the Alabama women judged the costumes.

Perhaps the hardest job the judges had was deciding the 28-29 Open Class. They finally gave first place to R. T. McDaniel with his perennial competitor, Charlie Adams, placing second.

Wendell Townsend wearing a brown suit with wide lapels, red and yellow stripes, derby hat, and black shirt was embarrassed to win the men's costume trophy. He said there were his everyday clothes.

Here are the final results:

Unrestored: Howell Bowden
Best 28-29 Closed: Bob Langford
Best 28-29-30-31 Open: R. T. McDaniel
Best 30-31 Closed: Paul White's Pickup
Best Ladies Costume: Mrs. Clyde Turk
Best Mens Costume: Wendell Townsend
Best childrens costume: June Langford

NEXT EVENT: Annual Banquet and election of officers in November.

Don Elliot Heald.

Mr. and Mrs. T. C. Langford and June. June won the Children's Costume prize.

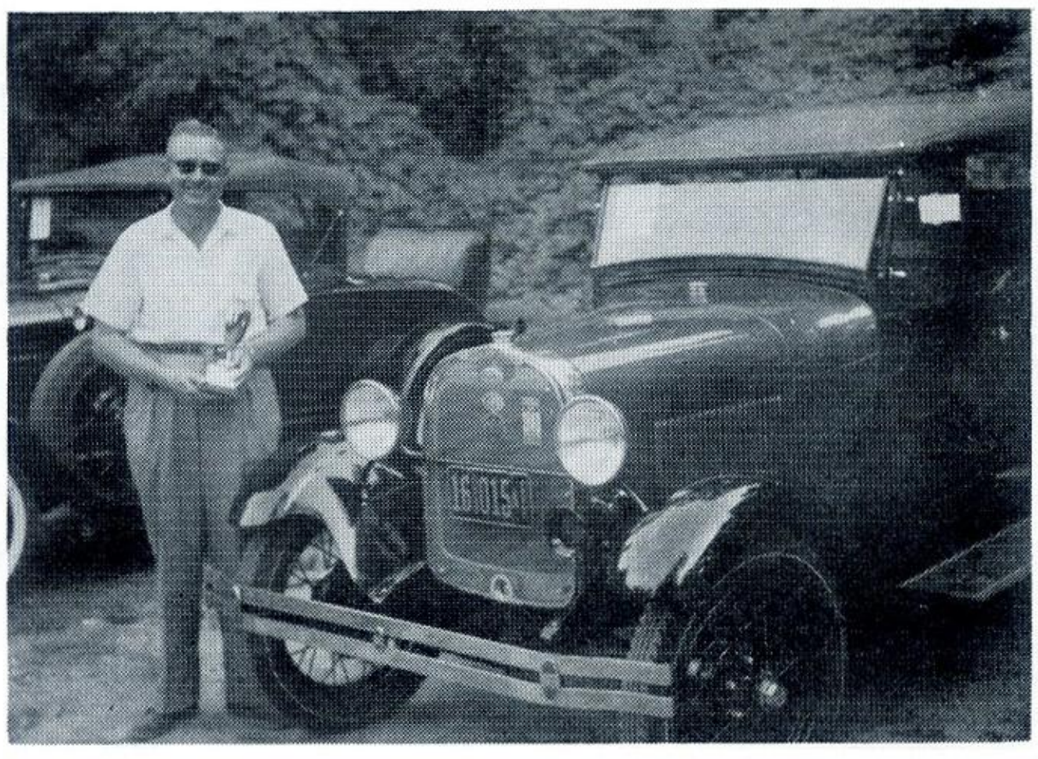

R. T. McDaniel and the best open car in the meet, a 29 Fordor Phaeton. In the background is Charlie Adams' second place roadster.

Wendell Townsend and his "every-day clothes" that won the men's costume trophy. The pin stripes in the brown suit are yellow and red.

Mr. and Mrs. Clyde Turk. She won the women's costume trophy.

Best 28-29 Closed trophy went to Bob Langford.

Best Unrestored in Show owned by Howell Bowden.

INDIANA - OHIO

CAPITOL CITY CHAPTER

Five members of the Capitol City Chapter and their families participated in the Third Annual WFBM-TV Antique Auto Tour, September 23 - 24.

Traveling in their "A's" were chapter president Melvin Dorbecker and his wife, Mr. and Mrs. John R. Fulton and their son, Johnny, Mr. and Mrs. Kenneth Ernst and daughters Kathy and Susie, Lester Mehaffey and his sons Larry and Dickie, and Elmer Jenkins, all of Indianapolis.

Seven other Indiana Model A fans also took part. They were Mr. and Mrs. Emmett Davis, Mr. and Mrs. Francis Balser, Mr. and Mrs. Richard Benefiel, Mr. and Mrs. Leon Crossman, Mr. and Mrs. Fred Day, Mr. and Mrs. Ben Yeager and Mr. Jack Sandifar and his son.

The tour left the Meadows Shopping Center, Indianapolis, at 10:00 AM, Saturday, September 23, on its way to Lafeyette. There were two stops, at Lebanon and Frankfort, where the enthusiasts were welcomed and feted.

At Lafayette, there was a banquet Saturday night and the following morning the tour began its return trip, stopping once for a welcome on the campus of Wabash College at Crawfordsville. From there, the procession drove to the Indianapolis Motor Speedway, where lunch awaited them. All tour members also had the chance to drive around the "500" track.

The piece-de-resistance of the lunch was of especial interest to the ladies. A barbecued side of beef, it had been started at 11 o'clock the night before, and slowly cooked to mouth watering tenderness.

Frances Farmer, movie star and WFBM hostess, was heard to ask one of the cooks if he had gotten any sleep.

"No, ma'am. You can't cook and sleep."

James P. Mullane, Secretary.

The Indiana-Ohio Region met Sunday, September 17, at the Richmond Municipal Airport at Boston, Indiana. The Fountain City Chapter was host.

Contests got under way about 10:30 with first and second place ribbons being awarded for: one cylinder race, blind driving, bumper on the line and men's and ladies' obsticle course.

The host chapter awarded three trophies as follows: Chapter Best Represented went to White River Valley Chapter; Longest Distance Traveled to Meet, Bill Siebold, Forth Wayne, 100 miles; Most Popular "A", Bob Wood, New Castle, Ind.

The Region board of judges is composed of each chapter president and the Region Technician. These men had a tough job to do, judging the cars by the Region Judging Standards; but they finally arrived at the following decissions: First Place Trophy, Jr. Division, Herb Walker, Centerville, Ind., 1929 Roadster; Second Place Ribbon, John Flynn, New Castle, Ind., 1931 Roadster DeLuxe. First Place Trophy, Sr. Division, Bob Wood, New Castle, Ind., 1931 Roadster DeLuxe; Second Place Ribbon, Herb Walker, Centerville. Congratulations men on these fine cars. Nice work!

During the business meeting the nominating committee was named to work on the nominating ballot for the coming year. Officers are to be elected at the December meeting.

Any member not receiving the "A Sputter", send a card to Mrs. Ben Yaeger, Red Key, Indiana.

The Christmas meet will be held December 3, 1961 at Lighted Acres, two miles north of Ossian, Indiana, on Rt. 1. Ke Kionga Chapter is host.

Many local persons came out to see the line up of 32 beautiful A's that the weather man smiled on. There were 112 people attending this meeting.

Jo Anne Walker, Secretary.

FLORIDA

RIDGE CHAPTER

Since our last article in MARC News, the Ridge Chapter has had quite a schedule of activities. Our July 25 business meeting was held in Winter Haven at Clyde Hogg's home with almost 100% of our members present. It was decided that our next tour on the 27th of August start from down town Lakeland and go to Bob and Arlene Heunisch's new home for a Buffet Lunch. Seven of our club cars lined

up in the back yard for inspection and conversation. Since we had decided earlier to try our first Gymkhana in September, some of the men practiced the gas off idleing and the one cylinder driving. (Have you ever tried driving your Model "A" on one cylinder? You have missed something if you haven't.)

Just two days later we had our regular August business meeting at Wimpy and Marlene Mann's home. There we made the final arrangements for our up coming Gymkhana. Our President Bob Heunisch got permission from the city to use Lakeland's old airport and one hangar. Vice President Wimpy Mann did a lot of running around in his 33 Plymouth getting pylons and even a public address system. It was decided if we could sell hot dogs and cold drinks, we would not only make a few extra dollars, but it also made it a lot easier on the women so they wouldn't have to prepare a lunch. One doesn't realize all the little details there is to having a Gymkhanna until you have tried one. I also might add that this was the first for our club and also first for most of our members. The Ridge Chapter invited the Tampa Bay and Central Florida Chapters to attend and compete in the competition. Three trophies were given away to the three first place winners and the Central Florida Chapter donated a fourth first place prize. The first place winners were:

Buck Swindoll, Obstacle course (Lakeland)
R. N. Immell, Orange stabbing (Orlando)
Madge Mallamas, Water glass on tray (Orlando)
Nathan and Myrtle Watkins, Blind fold driving (Lakeland)

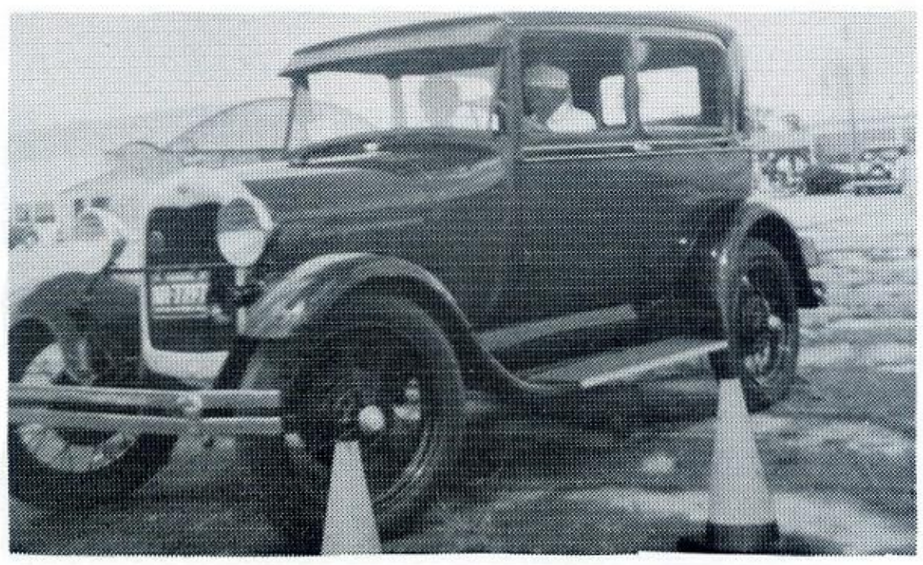

Bob and Ann Keifer going thru the Blindfold Driving Event at our first Gymkhana September 10 in Lakeland, Florida.

Most of the Ridge and Central Florida Chapter cars that completed at Gymkhana on September 10 in Lakeland, Fla.

You just can't convince Pee Wee that they didn't have Harems during the Model "A" era.

Some of the Ridge Chapter cars on August Tour.

We were beginning to feel like we were back in the late 20's and the early 30's with our gay costumes and cars on that beautiful sun shiny day of Sept. 10th. One fatality, Clyde Hogg trying to run his Model "A" on an empty gas tank--Don't try it. Arlene Heunisch, correspondent.

NORTH CAROLINA

The Piedmont Chapter of the North Carolina Region has been enjoying the nice weather we have had this summer by making a trip to Maryville, Tenn.

We left Winston-Salem, N. C. on June 30, 1961, with 10 "A" Models and 2 "B" Models and headed to the Hillbilly Homecoming at Maryville, Tenn. We traveled the way of Ashville, Cherokee Indian Reservation, and up the Great Smokie Mountains to Newfound Gap (elevation 5,048 feet), then down the Tenn. side to Maryville. We traveled about 10 hours and 280 miles. There were several "A" Models that joined us on the way. There were about 20 "A" Models from North Carolina that took part in the parade on Saturday, July 1, 1961, with the other "A" Models from Tennessee and other states. There was a count of 133 cars in the parade. We enjoyed the night performance at the high school where George Hamilton IV dedicated his part of the show to his friends from Winston-Salem, North Carolins, George's hometown.

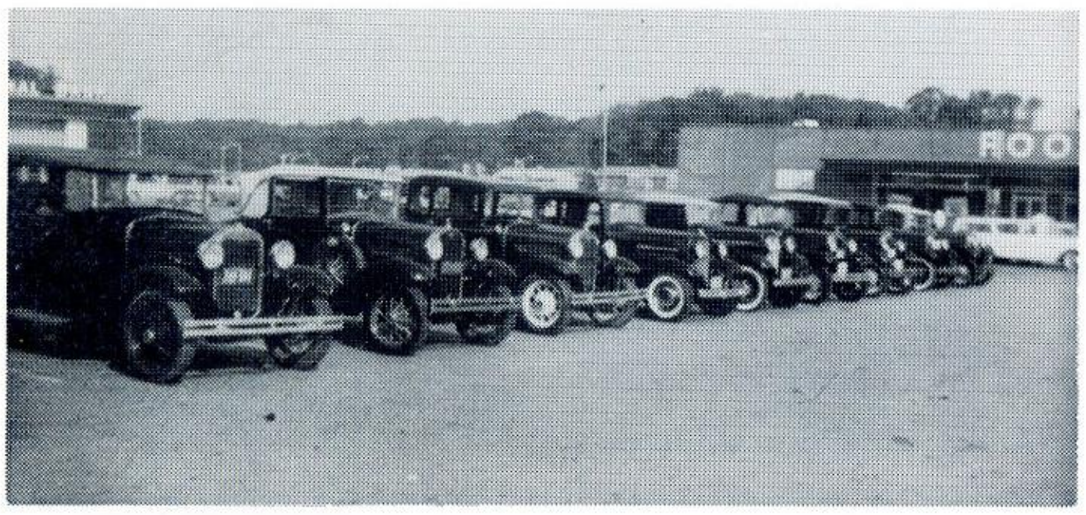

Some of the starters from Winston-Salem, N. C. to Maryville, Tenn.

21 "A" Models on the parking lot of Hanging Rock State Park.

We left Sunday morning for home. With one generator going to the bad on Ronnie Rumley's car on the way up, was the only trouble on the round trip of over 600 miles driving.

We have had several picnic outings. We went to Aberdeen, N. C. for a picnic with the tar Heel Club, and in return the Tar Heel Club went with up to Hanging Rock State Park for a picnic, Sunday, September 10. There were 21 "A" Models and 1 "B" Model at Hanging Rock, with some 75 people. With the turn out for this picnic, I believe the ladies are enjoying preparing the lunches, how about it ladies?

We have been in a number of parades at Mocksville, N. C.; East Bend, N. C. and Rural Hall, N. C. Pending are Yadkinville and Pilot Mountain, N. C., on Sept. 23 and November 11, 1961.

We are planning our fall mountain tour for October 14 and 15. This being an over-night trip on the Parkway along the top of the Blue Ridge Mountains.

I think after the mountain trip some of the "A" Models will go in for the winter touch-up. There should be some new "A" Models making their appearance in the Spring of 1962. R. Phil Gilbert.

SAN DIEGO

The Fifth Annual Meet of the San Diego Model A Restorers Club, held September 10, was, as usual, a grand success.

As luck would have it, five of the Meet committee chairmen attended the National Meet at Lake Forest, so they really had to hustle when they returned home to complete plans for our own Regional Meet.

Only 22 Model A's were entered for competition, but Coronado's Park was well filled with Model A's after the arrival of guests from Palomar Region, Harbor Region and the Model A Ford Club of America.

While the judges performed their laborous task, a full program of events were scheduled to keep the public interested. Every hour on the hour "Goodies", donated by local automotive supply companys, were raffled off. This drew quite a bit of attention as the prizes were quite worth while. Also, the hungry mob was kept well nourished with hot dogs and punch or coffee from our refreshment stand. A highlight of the day came when three little boys pulled their little red wagon into the park and started under selling their kool-aid against our punch. Refreshment chairman Paul George gave them an offer to buy them out, but they would have nothing to do with him. Very shrewd business men, these boys. Needless to say, we helped them sell out in short order. Help the youth of America is our motto!

Again, the San Diego women presented their fabulous, authentic fashion show. This too, is quite a highlight of the day. We have presented our show so many times, we are really becoming professional. We are always on the hunt for era clothing, and our wardrobes prove it. The range of costumes is really outstanding and we help each other by buying whenever we find something regardless whether it fits. It will surely fit someone in our club.

A happy ending to months of hard work came with awards presentation. The winners were:

1928-1929 Restored - Open	1st Jim Medina
1928-1929 Restored - Closed	1st Lambert Dial
	2nd Jim Medina
1930-1931 Restored - Closed	1st Charles Schnug
	2nd Clarence Scheidle
	3rd Ellyne Bain
1928-1929 Unrestored	1st Gene Show
1930-1931 Unrestored	1st Malcolm Holland
	2nd Carmen Dial
	3rd Vera Hannah
Commercial	1st C. G. Francisco
	2nd Gene Hannah
	3rd Frank Stephenson
Modified	1st Walter Anderson
	2nd Lindy Dial
	3rd Charles Hunter

Repairing Ignition Switch

Not many Model "A" owners can boast of having an original "pop-out" ignition switch. If you still have one on your car and it is not functioning properly or if you have a discarded one, here are a few suggestions and drawings which may help to get the unit back into good working order.

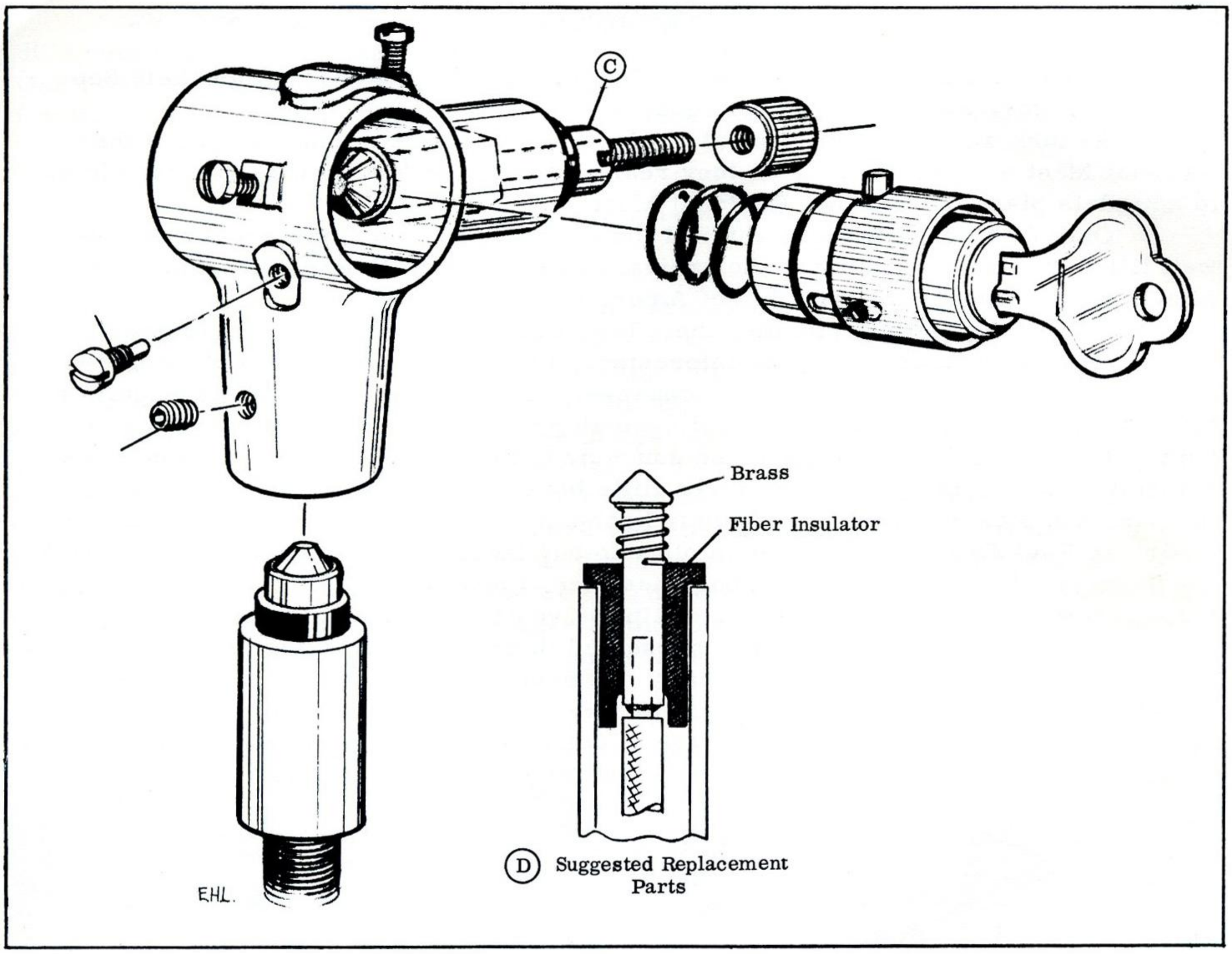

PART II: Repairing the "Pop-out" Type Ignition Switch.

As was common with the "replacement" type ignition switch in Part I, published in last month's MARC News, the "pop-out" switch also has two main sources of trouble; either a short in the wire or poor contact within the switch lock unit. Follow last month's suggestions on how to localize either of these two.

After removing cable from car, to remove the ignition lock cylinder from the housing, insert ignition key and turn key to "ON" position, remove the lock screw (A) and pull on key. (Lock cylinder will not come out unless key is in "ON" position). Observe the position of the lock assembly slot in relation to the lock screw for reassembly. With a pair of pliers grip the armored cable below the switch housing base and check if cable is loose from housing. After many years of constant "A" vibration, the cable, which was originally held securely in the housing, may have loosened, causing a poor contact or no contact at all between the brass button tip of the cable and the switch lock cylinder. If the cable is loose withdraw it from the switch housing. Drill and tap a hole for a #10-32 allen set screw as shown at (B) in drawing. This screw will provide a lock for holding cable firmly in place.

Check the spring loaded brass button tip at cable end and the contact end of terminal (C) inside of housing to insure that they are working freely. Lubricate with graphite if necessary (no oil). The terminal screw can be removed by loosening lock nut (C). Also check that the ignition lock cylinder works in and out of the

housing freely. Lubricate with graphite if necessary. If the "pop-out" lock cylinder spring is broken a replacement can be obtained from a hardware or auto supply store.

If there is a short within the cable and the wire must be replaced, follow the same proceedure for repairing the distributor end of cable as outlined in Part I. After the lower end of cable has been disassembled, the spring loaded brass button assembly at ignition lock end of cable can be pulled out. This unit must be preserved intact if possible. If the spring loaded brass button no longer works, a replacement can be fabricated as suggested by the sketch (D).

By George DeAngelis

MARC Club Merchandise

CAR EMBLEM $2.50
For mounting on your 'A' or on your 'second car'. Blue and black on silver. With mounting holes for installing.

DECAL . . . . . $ .25
The Official MARC emblem in full color for windshields, etc. Attaches to glass, metal or wood. . Five for $1.00

PRINTING MAT . . . . . $ .75
For your printer to reproduce the club emblem on letterheads, programs, stationery, or for any printing use.

MODEL A TOY. . . . . $ .65
'Tootsietoy' 1/50 scale model of the 1929 A Ford Coupe in sky blue and black. Silver radiator and bumpers.

CLUB STATIONERY. . . . . .

100 sheets	$ 2.00
200 sheets	4.75
500 sheets	9.00
1000 sheets.	17.00

(Special prices to regions)

MARC JEWELERY. . . . . .

Lapel pins.	$1.05
Tie clasp	1.60
Cuff links	1.85
Ladies earrings.	1.85
Key chain	1.85

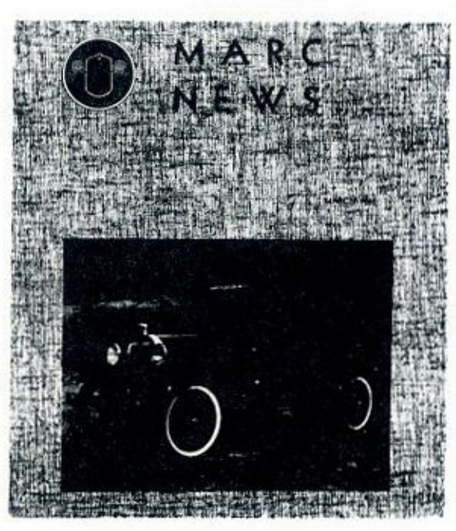

MARC NEWS. . . . . $.50
Back issues at 50¢ per copy. Good supply of 1959, 1960 and 1961 issues.

Name badges with the MARC emblem will arrive soon - Watch for them.

— ALL ITEMS SENT POST-PAID —

THE MODEL A RESTORER'S CLUB, INC.
CLUB MERCHANDISE
CHARLIE ADAMS
BOX 345
EAST POINT, GEORGIA

CLASSIFIED ADVERTISEMENTS

Classified advertising is limited to the exchange of non-commercial items or services. All others must use our commercial rates as found inside of front cover.

Ads are accepted to be inserted one time only.

All ads pertaining to the sale of a motor vehicle must include the price of same.

NOTICE:

Every effort is made to insure a correct reading. Neither the editors or the M. A. R. C. can be held accountable for typographical errors or misleading info contained in ads published therein.

To avoid errors, please print or type all ads. Also state whether they are FOR SALE or WANTED.

A MUST:

Your membership card number must accompany all ads.

Send all ads to M. A. R. C. Classified Editor:

William E. Hall
P. O. Box 615
Zanesville, Ohio

FOR SALE

1934 DeLuxe Ford Coupe (No rumble seat). This car is in outstanding condition having been on blocks most of its life - 37,000 original miles. Less than 200 mi. on rebuilt engine. $1,000 invested - asking $850.00.

Don McDougal 224 Bluff Avenue
LaGrange, Illinois

THE HELPER

To keep abreast of todays fast moving restoration world THE HELPER is a must. A publication listing hundreds of cars and parts. Send today for a sample copy. Subscription $2.00 per yr. U.S.A.

THE HELPER Box 315
Florissant, Missouri

New 1930 Short splash shields $5.75
Open car vacuum wipers 6.95
Windshield rubber . . . .per foot 35
Inside door handles 1.85
Also all rear fenders Model T 1917 - 1927
Splash pans, hood, blocks, etc. Self addressed envelope for prices. Postage extra on parts above.
Black standard top prop knobs. . .ea. . . .75
Nickel plated. 1.00
Knobs will fit A, T, B.

Ed Wright 16 Carnavon Circle
Springfield, Mass.

1931 Model A Ford Convertible Sedan (A-400). New fenders, splash shields and running boards. Professional paint job and striping. (chicle drab, and Copra Drab) All bright work buffed or rechromed. Engine professionally rebuilt. New top, top boot, upholstery good. Chassis and running gear rebuilt. 5 new tires. (side mount spare) Deluxe trunk rack, clock mirror, moto-meter, cigar lighter, new battery, 7000 miles since restoration. Car cruises nicely at 50 M.P.H. and can be driven anywhere, anytime. (Will start when most cars won't) Has manifold heater, original type shock absorbers all rebuilt. Brakes, steering gear, generator, starter, distributor, clutch all rebuilt. For the man or woman who wants a car ready to go, this is it. Price, $2500.00 firm, or will trade up or down for a 28-29 Lincoln, Cadilac or other classic roadster or phaeton. Will deliver within 400 miles at ten cents a mile. Color pictures 50 cents.

K. B. Brewer 2643 E. Streetsboro Rd.
Hudson, Ohio Phone Olympic 3-5251

SWAP - A - CAR

A most attractive publication for all enthusiasts. Antique, classic, sports, custom and special interest vehicles.

$1.00 per year.

For free sample copy write to:

SWAP - A - CAR
540 Sixth Street
La Salle, Illinois

MARC members: Have your name and address imprinted on official MARC stationery. $2.00 for first 50, $1.00 per each additional 100 (plus cost of stationery). Also will produce Common Sense Amounts of personalized Old Car stationery, and adhesive-back foil dash plaques. Write for free details.

John C. Jackson 9726 Delray Drive
Cincinnati 42, Ohio

1930 "AA" truck with grain box. No rust-outs or dents in fenders or body. Very solid and easily restorable. 20,000? original miles. Drive home. $190.00.
ALSO pair of good used front '29 fenders $20.00 pair.
ALSO early '28 left apron without "bump" brand new for $15.00.
WANTED: New '30 pickup splash aprons and running boards.

Jack Groot 344 Harding Road
Glen Ellyn, Illinois Phone HO 9-6759

Good used 30-31 Cpe-Rdste parts prices F.O.B.

Roadster Doors	each	$25.00
Original Motor Splash Shields	Pair	15.00
Open car Outside door handles	Pair	25.00
Rear fenders - excellent	each	25.00
Hood - excellent		15.00
Pair '30 runboards - excellent		40.00

Jim Tomlinson Rt. 18, Box 314C
Indpls. 24, Indiana

1929 Ford 2 Door Sedan, Body Perfect, Complete with all parts, motor rebuilt. Needs plating work. 75% Restored. Price $500.00

James W. Etchison 14419 Minerva
Dolton, Illinois

1930 Model "A" Roadster. Restored in 1957. The car has two fender wells, wind wings, side curtains, luggage rack, rumble seat, practically new tires and runs good. Was driven to Chicago this year. Only $895.00. Picture for 10¢

Gene Griffith 4775 Castleon Drive
Hamilton, Ohio TW 22279

28-31 Coupe Door Sill Plates	pair	$ 5.50
2 - RR Sedan/Tour Fenders	each	15.00
1 - RR Roadster Pickup (Dovetail)		30.00

All Parts New. Fenders 28/29.

Jim Schmidt 916 State Road
Hinckley 2, Ohio

A book on and about Henry Ford, FORD IDEALS, taken from Mr. Ford's page which appeared in the Dearborn Independent. Published by the Dearborn Publishing Co. 1922. This copy is in excellent condition, clean, no torn pages. Price $5.00.
1912-14 "Splitdorf" motorcycle light with self contained generator. Price $5.00.
I will accept a trade of early cast iron toys on the above.

Bill Hall P.O. Box 615
Zanesville, Ohio

1930 Pickup, running, $125. Pair of running boards, diamond design, good condition, for 1931 Pickup - $15.00 f.o.b.

Al Link RD 2, Box 2172
Yorktown Heights, N.Y. Tel. 914-BI8-5341

For 1928 Models:

New starter switch		$ 2.50
Powerhouse Armature		9.50
Roadster tail lite bracket to frame		5.00
Rear drums w/hubs	pair	2[illegible].00

USED:

Powerhouse generator, complete, working		15.00
Drum tail lite assembly, excellent		9.50

Postage extra. I have hundreds of 28, 29, 30, 31 parts. Send stamp for reply to your wants.

Late 1931 Zenith carburetors (used)		5.00
New Zenith repair kits		2.50
Complete cast iron filter to match		5.00
New original 28-29 nickeled brass gas caps		2.95
Original 28-31 front shackles w/bushings	set	2.50

Postage extra. No C.O.D.'s.

Ed Wright 876 Bay Street
Springfield, Mass.

New fenders - 1928 LR Coupe (without light holes) - $40.00. Same, 1929 with holes, $38.00. 1931 LF well, "AA", $55.00. 1928-29 LR Sedan, $25.00. NEW tires - 1 Goodyear 5.50x17 - $13.00. 3 US Nobby, 5.50x17 - $27.00.

Richmond Bell Box 703
Wellfleet, Mass.

New spare tire lock (authentic)	each	$ 4.25
Side mount grommet (new)	each	1.00
Authentic leather hood corners	pair	1.00
Rumble panel patterns	set	1.50
Authentic roadster rear window bumpers	set	1.00
Radiator shell grommet	set (3)	1.00

R. K. Hardesty 306 Angelus Drive
Amarillo, Texas

ALL NEW!

Original Trico Stainless wiper blades	$1.00
Original Trico wiper arms	1.00
Foot Rest pads	.35
Started rod pads	.35
Gas pedal pads	.35
Brake and clutch pads	1.00
Horn bug screens	.60

C. E. Moebius 84 Stanley Avenue
Nutley 10, New Jersey

POLYPRINTS RE-PUBLICATIONS
BOOKS ABOUT FORDS

1903 TO 1961

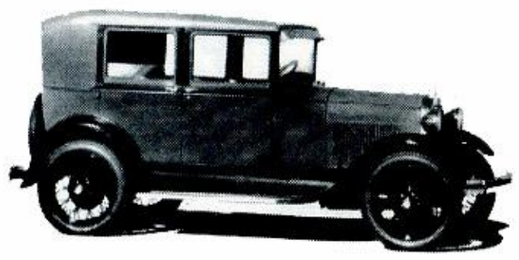

MODELS K-N-R-S T & A V-8

See Your Favorite Antique Parts Dealer—or write to:—
POLYPRINTS, INC., Box 3674, San Francisco 19, Calif.

1930-31 Ford rumble seat lid, pair cowl lights, speedometer, dash panel, 1930 radiator shell, pair 1930 Coupe front fenders (plain), right rear fender, parts of all kinds from 1930 Fordor. 1928-29 Ford radiator shell (no cracks), tail light w/bracket, hood, pair front fenders (plain), right rear, running boards (pair). Other "A" parts. Pick-up box w/tailgate, extra gate. 1930-31 Windshield (coupe etc.), 1928-31 Headlight rims and lens complete headlights, two horns. Coupe rearwindow frames, 1930-31 steering column, 1928-31 bumper brackets, 19" and 21" wheels. Complete motors, trans, or any other motor parts. 1929 speedometer.

Ronald Kuhlman 322 So. Hartwell
Gilman, Illinois

SUBSCRIBE to oldest and largest antique car publication, over 9,500 paid circulation, up to 64 pages per edition, more Ford ads by far than any other publication. Only $1.25 a year in USA by 3rd class mail, or $2.50 a year in USA or Canada by speedy 1st Class Mail.

HEMMINGS MOTOR NEWS
Quincy 29, Illinois

MODEL A PARTS

Send fifty cents (refundable with first order) for our brand new, 32 page catalogue of over 300 quality parts, accessories, and books for the Model A Ford.

AUTOMOTIVE OBSOLETE
Box 115 Ryder Station
BROOKLYN 34, NEW YORK

NEW, STEAM BENT, TOP GRADE OAK, TOP BOWS

Sizes to fit all Roadsters and Tourings.
48-50-52-54-56-58-60 inches, inside measurements.

Each $3.50; lots of 4 or more $3.00 each
Postpaid

KIRKLAND
Post Office Box 174
UNION CITY, TENNESSEE

WANTED

Both rear seats for 1931 Station Wagon or patterns for same. Also side curtains.

Eugene M. Hannah 3510 Buena Vista
San Diego 9, California

WANTED: For 1931 Deluxe Roadster - windshield, wind wings, cowl lamps, rear view mirror, shock absorbers, outside door handles, right and left front fenders with wheel wells, pair of side tire mount arms, Deluxe trunk rack, right rear fender support rod (rear), rumble seat floor and seat base, right splash shield, right tail light, tail light lens retainer, horn cable cover.

John H. Hehman 89-22 189 St.
Hollis 23, N. Y.

Can anyone tell me which other 30-31 body styles would have interchangeable rear fenders with my 1931 Victoria? Thank you for your help.

L. L. "Johnny" Johnson 626 Ludlow
Lawrenceburg, Indiana

Chrysler 29 to 32 Roadster or Touring, any condition. Wish to buy or trade 29 Ford Roadster. All letters answered.

George Pritchett, Jr. Tunnel Road
Marietta, Ohio

For 1929 Model A Station Wagon - Sun Visor, Rear Bench Seat, Left front welled Fender, Plain right front Fender, Radiator Splash Apron, Frame Horn Covers, Five 21" Wheels, Horn, Headlights and Bar, Tailight, Steering Wheel, Horn and Light Switch, Ignition Pop Out Switch, Bumper. All the above must be in MINT condition.

William G. Shearman Maddox Table Company
Jamestown, New York

Two rear fenders for 1931 Ford, four door town sedan. New or good used ones will do.

L. B. Shields 1925 Butler Street
Winston Salem, N. C.

The following parts for 1930 - 4 Dr. Phaeton: New radiator apron, pair of top rest sockets, new stanchion post for passenger side, 4 new champion C-4 spark plugs with wide brass caps at the top, pair of front top sockets for 4 Dr. Phaeton, locking gear shift for transmission, new 1930 keyed type steering wheel. All replies answered.

Jerry N. Hill 4411 Cutshaw Avenue
Richmond, Virginia

DUES NOW PAYABLE

1962 DUES ARE PAYABLE FOR RENEWALS NOVEMBER 1, 1961. ALL DUES MUST BE PAID ON OR BEFORE JANUARY 1, 1962 OR MEMBERS BECOME DELINQUENT.

TECHNICAL CORNER

NEW CURE FOR CARBURETOR FLOODING

With installation of a new Viton fuel inlet needle valve and seat assembly, developed by Holley Carburetor Company, Model "A" owners can now eliminate carburetor flooding, caused by dirt in the fuel supply, and enjoy better engine performance.

This revolutionary development, introduced earlier this year by Holley for late model cars, represented a major break-through in eliminating a great cause of carburetor flooding. As word of the success of the device got around to owners of Model "A" Ford cars, more and more requests were received for a Viton needle valve and seat assembly for Model "A" carburetors. In response to these requests, and because of long (and nostalgic) association with Ford products, Holley has adapted this modern development to accommodate owners of these prized Ford cars.

The Holley Fuel Inlet Needle Valve has a tip of Viton, a tough, durable DePont material, which is highly resilient yet defies abrasion and heat. This Viton tip assures a positive sealing of the valve and seat, even when there are contaminating particles in the fuel. More than two years of exhaustive testing by Holley have proved this new development assures thousands of miles of trouble-free driving.

Holley Carburetor Company, one of the true pioneer suppliers in the automotive industry, has been manufacturing carburetors since 1907 for Ford cars, and a host of other American-built cars. Through the years, Holley has made numerous important contributions to the development of precision carburetion and ignition equipment which have resulted in improved engine performance and efficiency. The development of the new Viton needle valve and seat assembly represents still another Holley contribution to better motoring.

The Holley Model "A" Fuel Inlet Needle Valve and Seat Assembly is now available, for a limited time only, to accommodate owners of Model "A's" with original equipment carburetors. Order directly from Holley Carburetor Company, Warren, Michigan, through Yale Shepard, Director of Advertising, for $3.50. Details for ordering will be found in an advertisement which appears elsewhere in this issue.

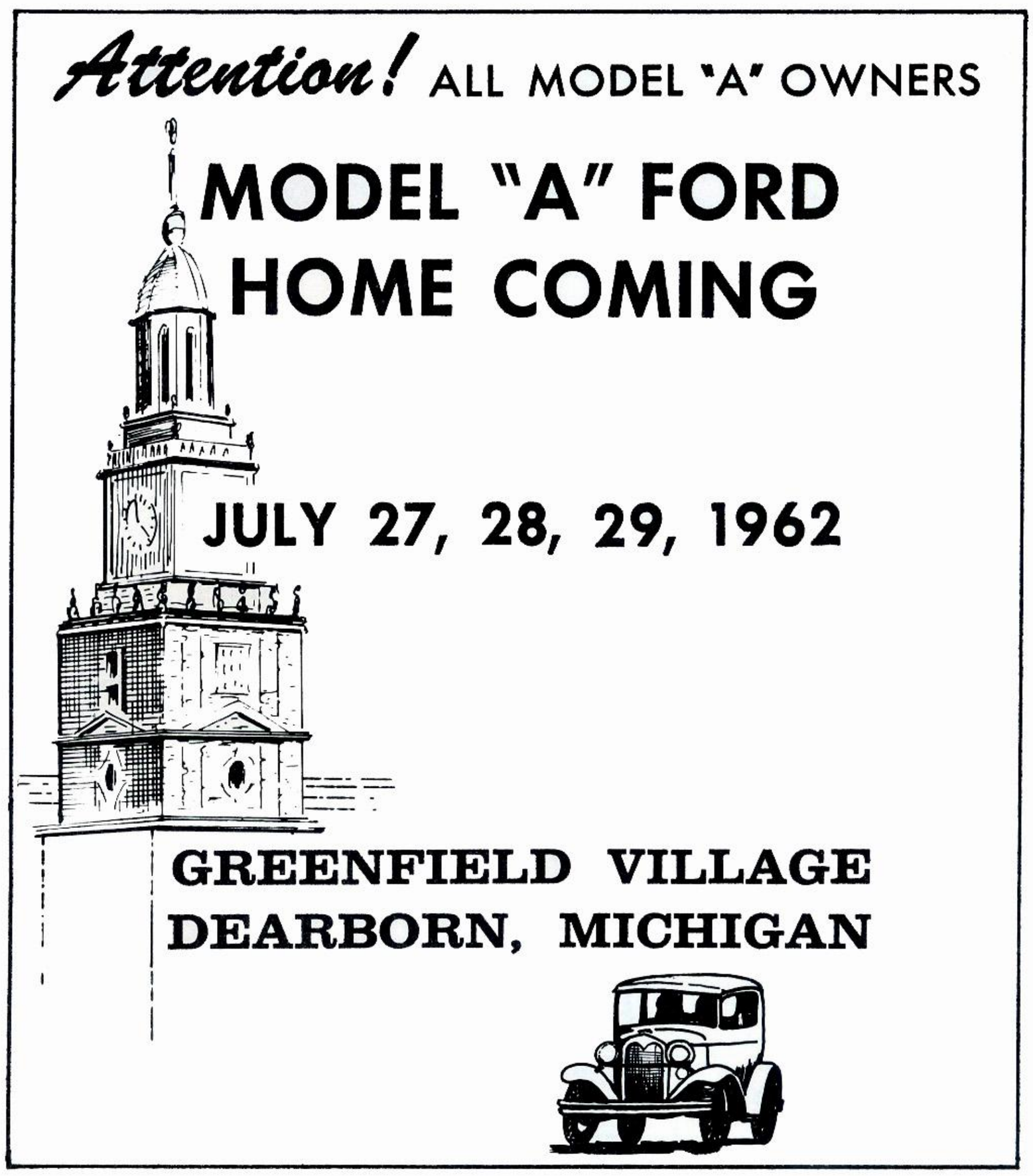

Attention

ALL FORD MODEL "A" OWNERS

RESTORE TOP CARBURETOR PERFORMANCE!

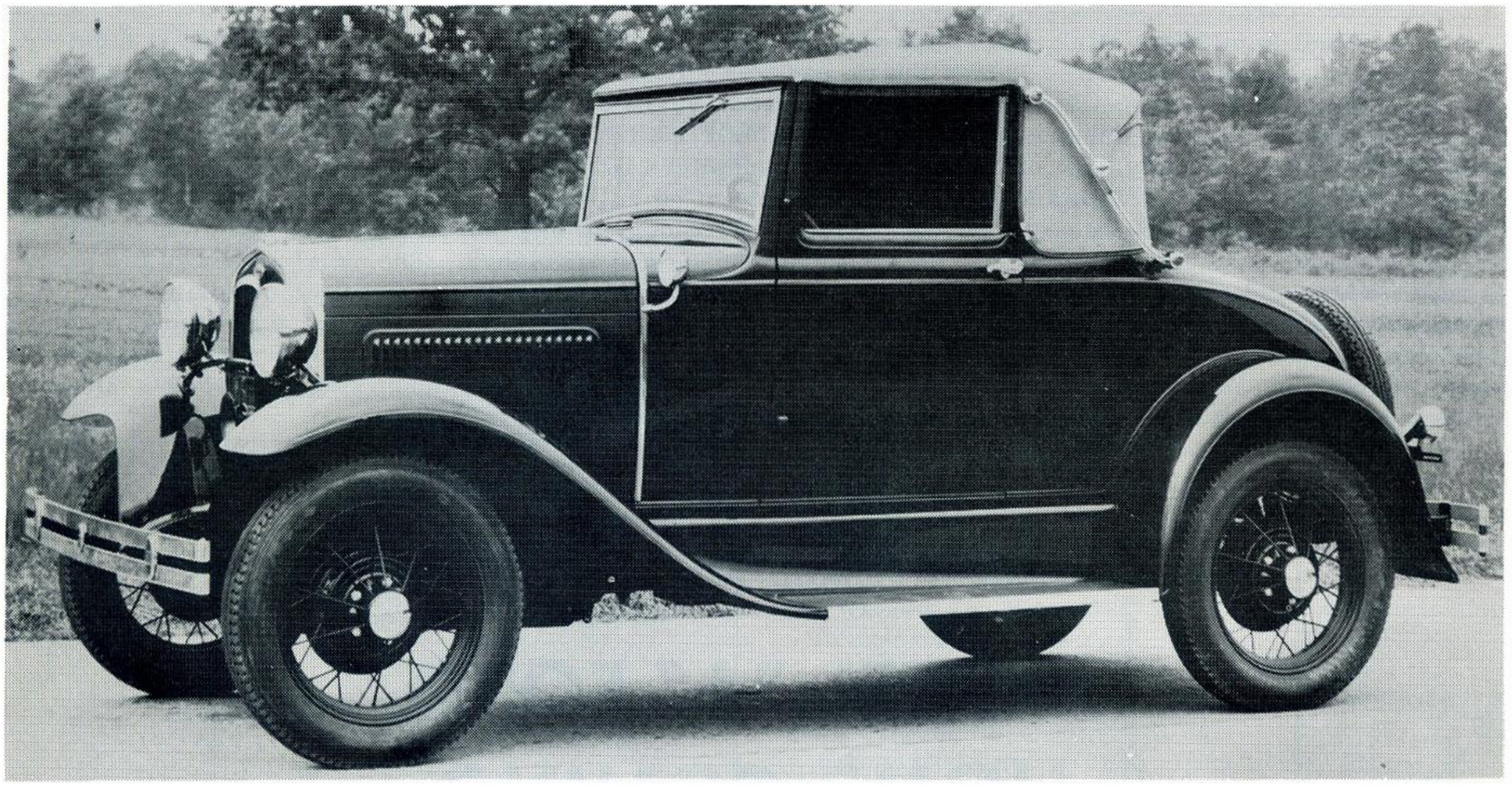

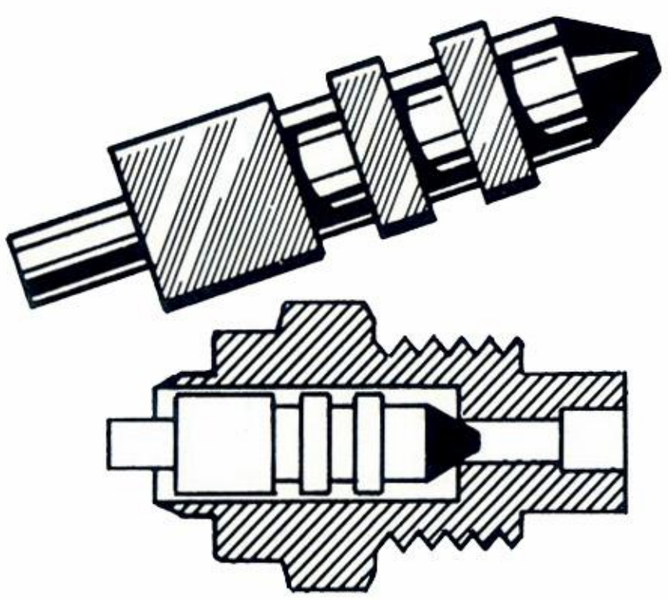

Cut-away view shows how Viton Needle Valve makes positive seal with seat.

*DuPont's registered trade mark.

HOLLEY Carburetor Co.

11955 E. Nine Mile Road
Warren, Michigan

Make that prized Model "A" run better than ever! Stop carburetor flooding now with a Holley Viton* Fuel Inlet Needle Valve and Seat Assembly!

This modern development by Holley, pioneer manufacturer of original equipment carburetors, has already been proved by thousands of miles of trouble-free driving on today's cars, including 1962 models. In response to many requests, Holley engineered this advanced product to accommodate owners of Model "A" vehicles. The resilient tip of tough Viton assures a positive sealing of the valve and seat.

Order your Model "A" version of the Holley Viton Needle Valve and Seat Assembly today! Offer good for a limited time only. *Be sure to specify MODEL "A".*

ORDER NOW

Only $3.50

shipped prepaid

Mr. Y. W. Shepard, Holley Carburetor Company
11955 E. Nine Mile Road, Warren, Michigan
Please send me ☐ Model "A" Viton Fuel Inlet Needle Valve and Seat Assemblies. Enclosed is ☐ Check ☐ Money Order for $_____. (Michigan residents add 4% sales tax)

NAME

ADDRESS

CITY ZONE STATE

B

Enclose check or money order, no C.O.D.'s. Michigan residents add 4% sales tax